CPD RECEIVED 5/4/18

SEC. 28, T18N., R2W., W.M.

SOUTH PUGET SOUND COMMUNITY COLLEGE
HEALTH AND WELLNESS CENTER
CUP SUBMITTAL
OLYMPIA, WASHINGTON

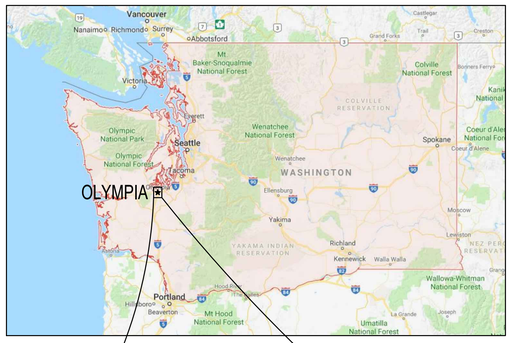

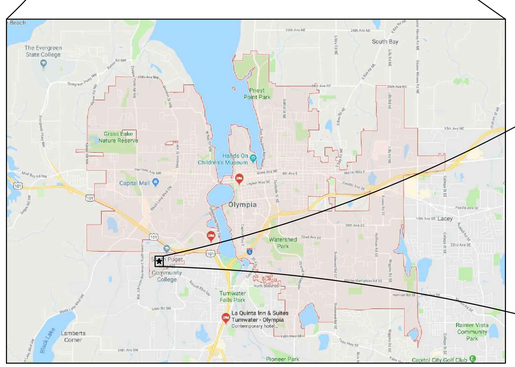

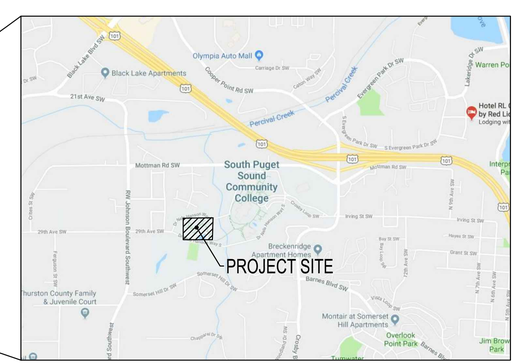

N

NTS

A PORTION OF SEC 28, T18N., R2W., W.M.
OLYMPIA, WA

OWNER / APPLICANT
SOUTH PUGET SOUND COMMUNITY COLLEGE
2011 MOTTMAN RD SW
OLYMPIA, WA 98512
PHONE: 360.596.5227
CONTACT: DEXTER JOHNSON

CONSULTANTS
SCJ ALLIANCE
8730 TALLON LANE NE, SUITE 200
LACEY, WA 98516
PHONE: 360.352.1465
CONTACT: ROSS JARVIS, P.E.

ARCHITECT:
KMB ARCHITECTS
906 COLUMBIA STREET SW, SUTIE 400
OLYMPIA, WA 98501
PHONE: 360.292.1217
CONTACT: JAMES HILL

SURVEYOR:
KPFF
612 WOODLAND SQUARE LOOP SE, SUITE 100
LACEY, WA 98503
PHONE: 360.292.7230
CONTACT: JEREME CHAPMAN, P.L.S.

GEOTECH:
GEOENGINEERS
1101 FAWCETT AVE #200
TACOMA, WA 98402
PHONE: 425.8616002
CONTACT: KYLE SMITH

SITE INFORMATION
PARCEL NUMBER:12828110500
ACRES: ±86.49

SITE ADDRESS:
2011 MOTTMAN RD SW
OLYMPIA, WA 98512

BASIS OF MERIDIAN:
NAD 83/91 – PER THURSTON COUNTY HIGH PRECISION NETWORK CONTROL POINTS 8204 AND 476AZ.

DATUM:
NAVD 88 – PER THURSTON COUNTY HIGH PRECISION NETWORK CONTROL POINT 8204.

UTILITIES
STORMWATER/SEWER/WATER/SOLID WASTE
CITY OF OLYMPIA
CITY UTILITIES
9247TH AVENUE, STE A
OLYMPIA, WA 98507
PH: 360.753.8588
EMERGENCY SERVICE: 360.753.8333

ELECTRIC/NATURAL GAS:
PUGET SOUND ENERGY – PSE
10885 NE 4TH ST
BELLEVUE, WA 98009
PH: 425.452.1234
EMERGENCY SERVICE: 888.225.5773
CONTACT: DAVE LESINKSI, ENGINEERING SPECIALIST, CONSTRUCTION SERVICES, PH: 253.476.6425

CUSTOMER CONSTRUCTION:
3130 S 38TH ST
TACOMA, WA 98409
PH: 888.321.7779

TELEPHONE:
CENTURY LINK
711 CAPITOL WAY S, STE 307
OLYMPIA, WA 98501
PH: 360.754.5912
CONTACT: WAYDE HOLMQUIST, SR DESIGN ENGINEER

CABLE:
COMCAST
410 VALLEY AVE NW. STE 9
PUYALLUP, WA 98371
PH: 360.261.0945
CONTACT: ERIC PARTON, COMCAST BUSINESS SERVICES GROUP

SHEET INDEX

SHEET NO.	SHEET TITLE	SHEET DESCRIPTION
1	CV–01	COVER SHEET
2	EX–01	TOPOGRAPHIC SURVEY
3	EC–01	DEMOLITION AND TESC PLAN
4	SP–01	SITE IMPROVEMENT PLAN
5	CG–01	GRADING PLAN
6	SD–01	DRAINAGE PLAN
7	SD–02	DRAINAGE DETAILS
8	UT–01	WATER AND SEWER PLAN
9	UT–02	WATER AND SEWER DETAILS

CALL BEFORE YOU DIG
THE CONTRACTOR SHALL BE FULLY RESPONSIBLE FOR THE LOCATION AND PROTECTION OF ALL EXISTING UTILITIES. THE CONTRACTOR SHALL VERIFY ALL UTILITY LOCATIONS PRIOR TO CONSTRUCTION BY CALLING THE UNDERGROUND LOCATE LINE AT (800) 424–5555 A MINIMUM OF 48 HOURS PRIOR TO ANY EXCAVATION.

SCJ ALLIANCE
CONSULTING SERVICES
8730 TALLON LANE NE, SUITE 200, LACEY, WA 98516
P: 360.352.1465 F: 360.352.1509
SCJALLIANCE.COM

KMB architects
906 Columbia Street SW, Suite 400
Olympia, Washington 98501
360.352.8883

ROSS D. JARVIS
STATE OF WASHINGTON
43668
REGISTERED
PROFESSIONAL ENGINEER

KMB Project # E1626

HEALTH AND WELLNESS CENTER RENOVATION AND ADDITION
SOUTH PUGET SOUND COMMUNITY COLLEGE
2011 MOTTMAN ROAD SW, OLYMPIA, WA 98512
STATE PROJECT NO. 2018-111A

ORIGINAL SHEET SIZE = 24 x 36
HALF SIZE REDUCTIONS = 11 x 17

REVISIONS:

DATE: 05/02/2018

DESIGN DEVELOPMENT

SHEET NO.
CV-01
COVER SHEET

LAST SAVE: mallory.dobbe, 0850.17 CV-01.dwg, April 17, 2018 (9:27 AM)
PLOT: \\lcy-print.ad.scj.pl\Lcy WkStn Blk (Konica C1060), 8.5x11; ---- April 30, 2018 (3:38 PM)

CPD RECEIVED 5/4/18

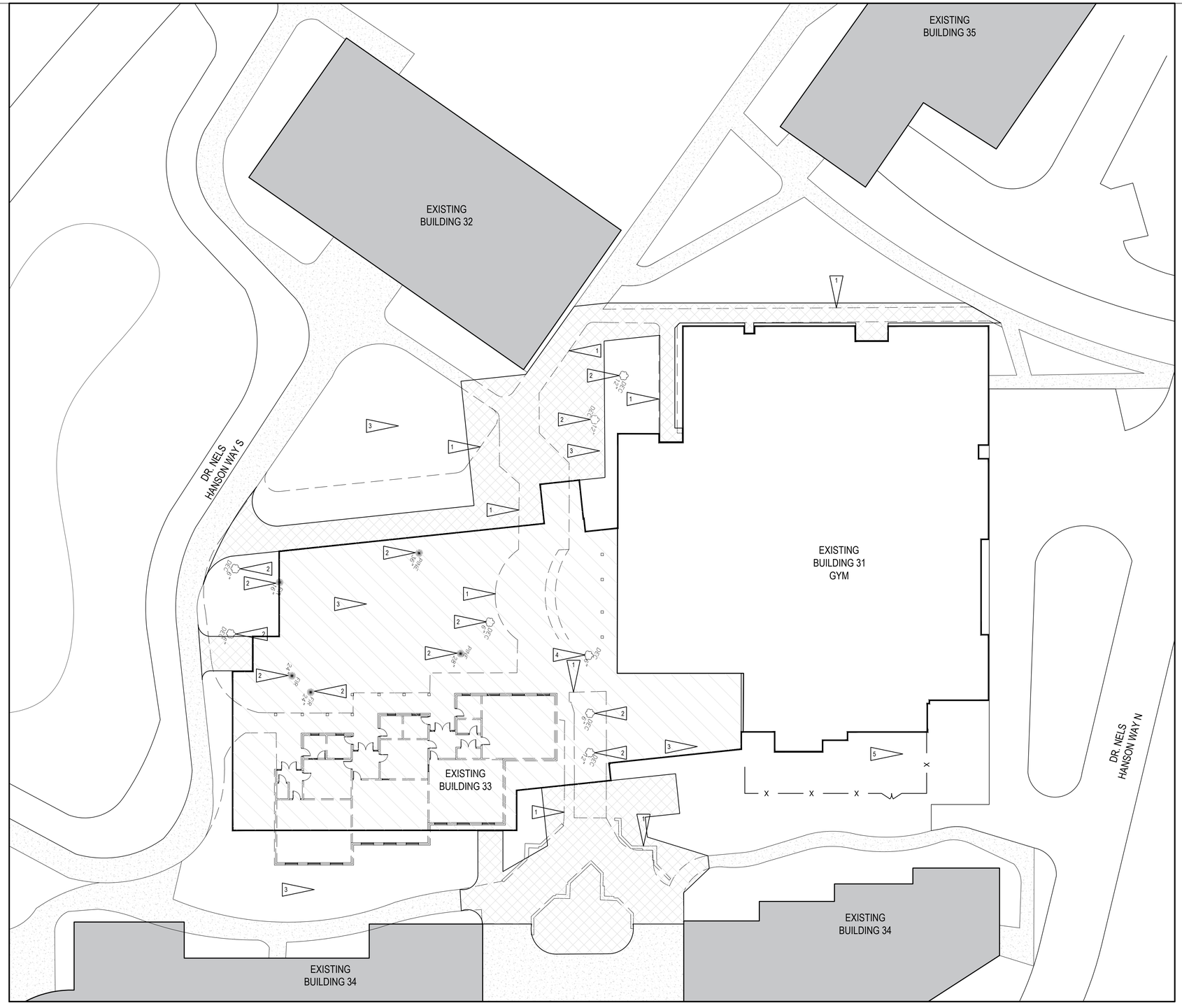

NORTH

OVERALL DEMOLITION SITE PLAN

SCALE: 1" = 20'

0 10' 20' 40'
SCALE: 1" = 20'-0"

GENERAL NOTES:

1. REFER TO AD102 FOR BUILDING 33 DEMOLITION PLAN
2. REFER TO AD103 FOR BUILDING 31 DEMOLITION PLAN
3. REFER TO AD104 FOR BUILDING 32 DEMOLITION PLAN
4. REFER TO CIVIL FOR SETBACKS, GRADING, UTILITY LOCATIONS, AND ADDITIONAL INFORMATION.
5. PROVIDE JOINTS IN SIDEWALK PER CIVIL.
6. PROVIDE POSITIVE SLOPE AWAY FROM BUILDING AT SIDEWALKS.

DEMOLITION SITE PLAN FLAG NOTES:

1. DEMOLISH EXISTING SIDEWALK REFER TO CIVIL FOR EXTENTS AND DETAILS.
2. REMOVE EXISTING TREES REFER TO CIVIL EXTENTS AND DETAILS.
3. REMOVE EXISTING SOD, DIRT, ETC. REFER TO CIVIL
4. REMOVE AND PROTECT EXISTING DEDICATION TREE AND MONUMENT AND SAVE FOR LATER INSULATION. CONTRACTOR TO COORDINATE WITH OWNER AND ARCHITECT FOR NEW LOCATION OF MONUMENT AND TREE.
5. REMOVE EXISTING COOLING TOWER FOR RELOCATION TO BUILDING TO BUILDING 32. MOVING OF COOLING TOWER TO BE PHASED WITH DEMOLITION OF BUILDING 33. CONTRACTOR TO COORDINATE WITH OWNER AND ARCHITECT ON NEW LOCATION OF COOLING TOWER NEAR BUILDING 32.

DEMOLITION SITE PLAN LEGEND:

- ITEMS TO BE DEMOLISHED
- PROPOSED BUILDING ADDITION
- PROPOSED WALKWAYS/STAIRS/RAMP
- EXISTING WALKS TO REMAIN

KMB architects
906 Columbia Street SW, Suite 400
Olympia, Washington 98501
360.352.8883

10347 REGISTERED ARCHITECT JAMES NEIL PRUITT OF WASHINGTON
NOT FOR CONSTRUCTION

KMB Project # E1626

HEALTH AND WELLNESS CENTER RENOVATION AND ADDITION
SOUTH PUGET SOUND COMMUNITY COLLEGE

2011 MOTTMAN ROAD SW, OLYMPIA, WA 98512
STATE PROJECT NO. 2018-111A

ORIGINAL SHEET SIZE = 24 x 36
HALF SIZE REDUCTIONS = 11 x 17

REVISIONS:

DATE: 05/01/2018

DESIGN DEVELOPMENT

SHEET NO.

AD101

OVERALL SITE DEMOLITION PLAN

LAST SAVE: rubennunez AD101 Overall Site Demolition Plan.dwg - May 1, 2018 (4:10 PM)
PLOT: DWG To PDF.pc3, ARCH full bleed D (36.00 x 24.00 Inches), NCS.ctb - May 1, 2018 (6:46 PM)

CPD RECEIVED 5/4/18

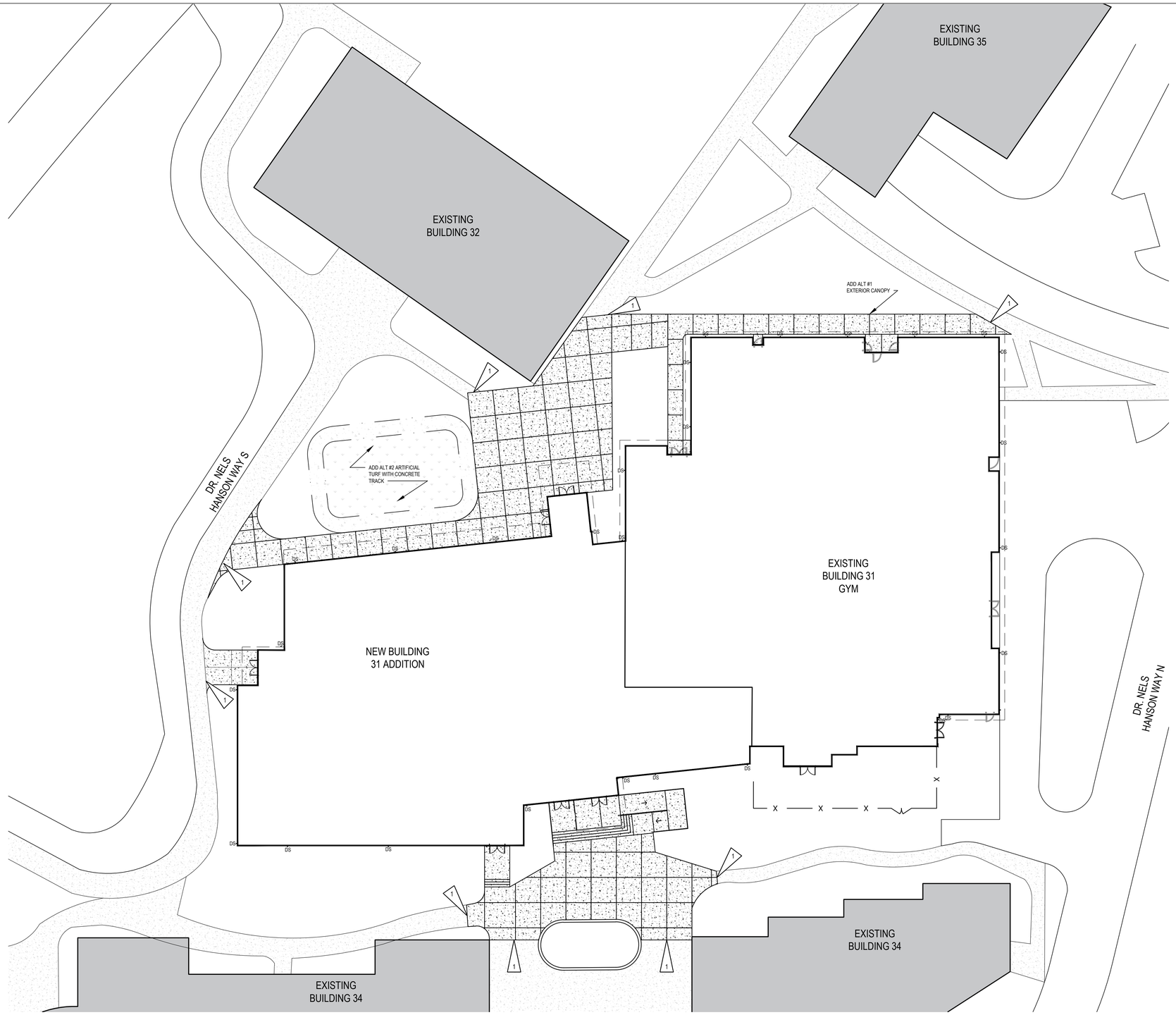

OVERALL SITE PLAN

SCALE: 1" = 20'

SITE PLAN GENERAL NOTES:

1. REFER TO A-101 OVERALL FLOOR PLAN
2. REFER TO CIVIL FOR SETBACKS, GRADING, UTILITY LOCATIONS, AND ADDITIONAL INFORMATION.
3. PROVIDE JOINTS IN SIDEWALK PER CIVIL.
4. PROVIDE POSITIVE SLOPE AWAY FROM BUILDING AT SIDEWALKS.
6. REFER TO C.### FOR SIDEWALK DIMENSIONS

SITE PLAN LEGEND:

- NEW SIDEWALKS, REFER TO CIVIL
- EXISTING SIDEWALKS, REFER TO CIVIL
- DS — DOWNSPOUTS
- ARTIFICIAL TURF

SITE PLAN FLAG NOTES:

1 — NEW SIDEWALK TO MATCH WITH EXISTING SIDEWALK FINISH ELEVATION

ADDITIVE ALTERNATES

1. ADDITIVE ALTERNATE #1
   - EXTERIOR CANOPY STRUCTURE
2. ADDITIVE ALTERNATE #2
   - ARTIFICIAL TURF AND CONCRETE TRACK

KMB architects
906 Columbia Street SW, Suite 400
Olympia, Washington 98501
360.352.8883

10347 REGISTERED ARCHITECT JAMES NEIL PRUITT OF WASHINGTON
NOT FOR CONSTRUCTION

KMB Project # E1626

HEALTH AND WELLNESS CENTER RENOVATION AND ADDITION
SOUTH PUGET SOUND COMMUNITY COLLEGE

2011 MOTTMAN ROAD SW, OLYMPIA, WA 98512
STATE PROJECT NO. 2018-111A

ORIGINAL SHEET SIZE = 24 x 36
HALF SIZE REDUCTIONS = 11 x 17

REVISIONS:

DATE: 05/01/2018

DESIGN DEVELOPMENT

SHEET NO.

AS101

OVERALL SITE PLAN

LAST SAVE: emilymoneymaker, AS101 Overall Site Plan.dwg - May 1, 2018 (9:16 AM)
PLOT: DWG To PDF.pc3, ARCH full bleed D (36.00 x 24.00 Inches), NCS.ctb - May 1, 2018 (3:21 PM)

CPD RECEIVED 5/4/18

GENERAL NOTES:

1. REFER TO SHEETS A-501 AND A-502 FOR EXTERIOR WALL AND PARTITION TYPES.
2. REFER TO ENLARGED PLANS FOR ADDITIONAL WALL TYPE CALL-OUTS AND DIMENSIONS.
3. GRID DIMENSIONS ARE TO EXTERIOR FACE OF STUD.
4. DIMENSIONS ARE TO GRID OR FACE OF STUD.
5. REFER TO A-601 FOR DOOR SCHEDULE.
6. REFER TO A-611 FOR DOOR, RELITE, AND FRAME TYPES
7. REFER TO A-612 FOR STOREFRONT AND WINDOW TYPES
8. REFER TO A-621 FOR FINISH SCHEDULE

PLAN LEGEND:

	WALK OFF MAT
FE	BRACKET MOUNTED FIRE EXTINGUISHER
FEC	FIRE EXTINGUISHER AND CABINET
DS•	DOWNSPOUT

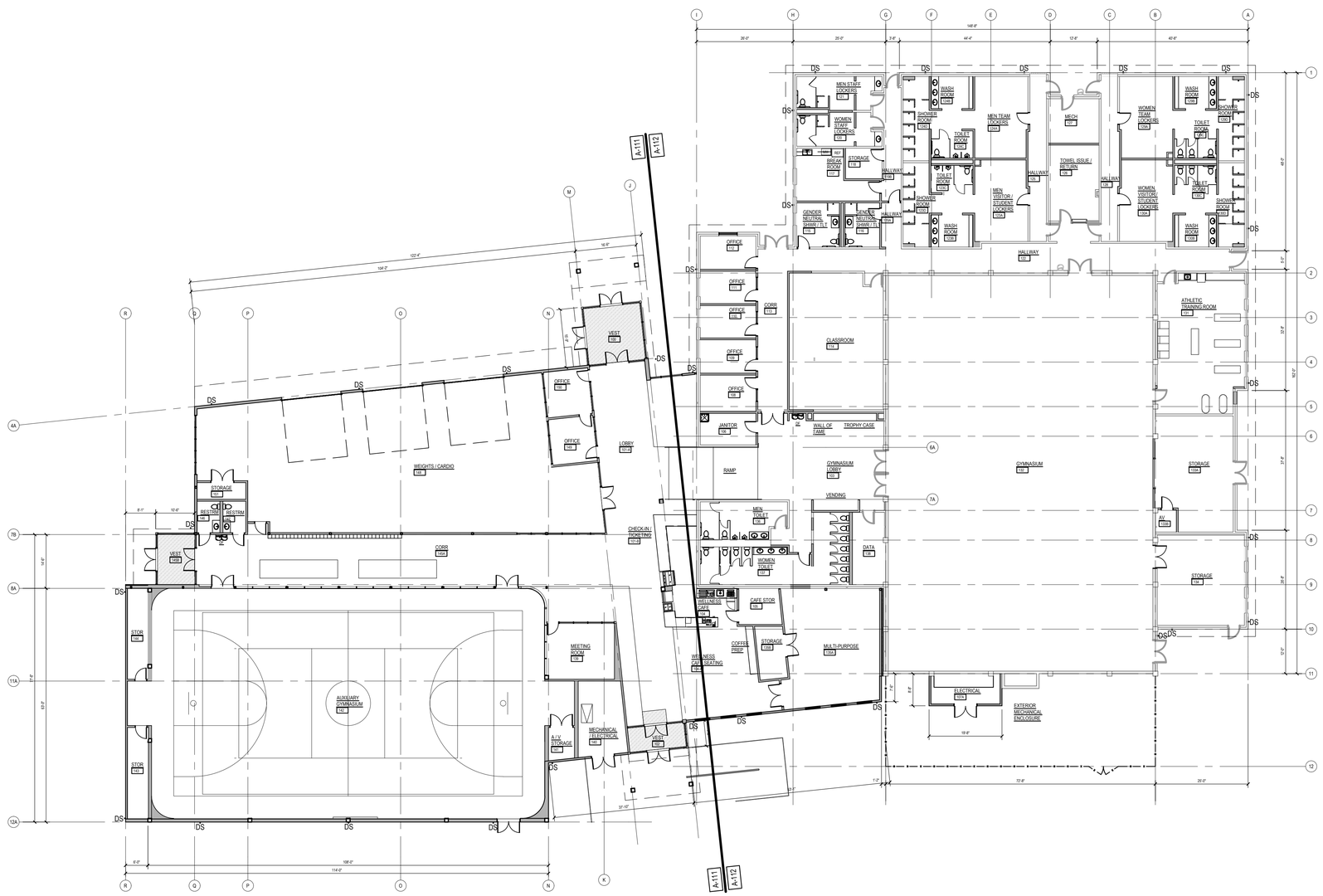

NORTH

OVERALL FLOOR PLAN

SCALE: 1/16" = 1'-0"

0 8' 16' 32'

SCALE: 1/16" = 1'-0"

KMB architects
906 Columbia Street SW, Suite 400
Olympia, Washington 98501
360.352.8883

10347 REGISTERED ARCHITECT JAMES NEU STATE OF WASHINGTON NOT FOR CONSTRUCTION

KMB Project # E1626

HEALTH AND WELLNESS CENTER RENOVATION AND ADDITION
SOUTH PUGET SOUND COMMUNITY COLLEGE

2011 MOTTMAN ROAD SW, OLYMPIA, WA 98512
STATE PROJECT NO. 2018-111A

ORIGINAL SHEET SIZE = 24 x 36
HALF SIZE REDUCTIONS = 11 x 17

REVISIONS:

DATE 05/01/2018

DESIGN DEVELOPMENT

SHEET NO.

A-101

OVERALL FLOOR PLAN

LAST SAVE: emilyjmcoleymaker, A-101 Overall Floor Plan.dwg - May 2, 2018 (9:08 AM)
PLOT: DWG To PDF.pc3, ARCH full bleed D (36.00 x 24.00 Inches), NCS.ctb - May 2, 2018 (10:47 AM)

CPD RECEIVED 5/4/18

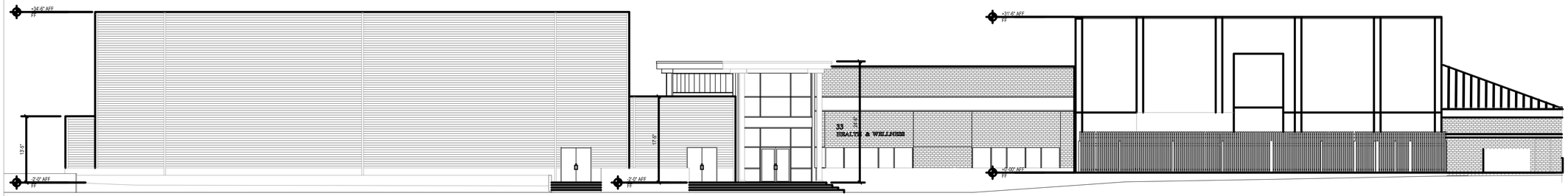

1 OVERALL ~~WEST~~ EAST ELEVATION

SCALE: 3/32" = 1'-0"

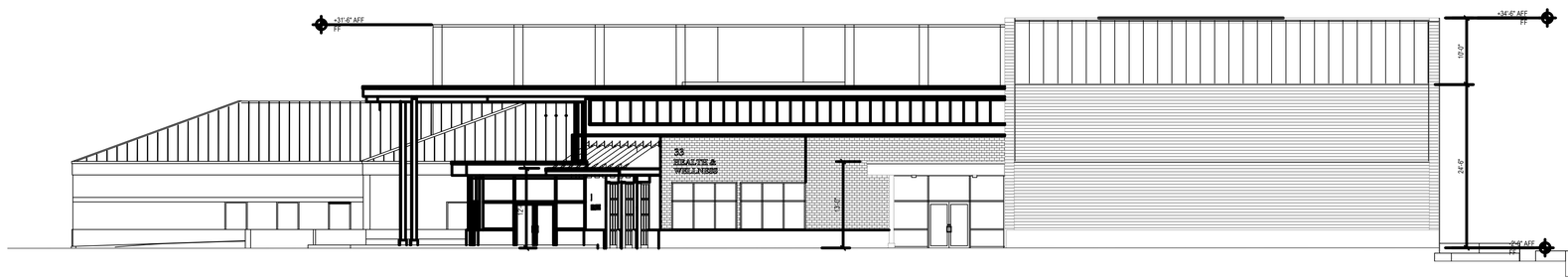

2 OVERALL SOUTH ELEVATION

SCALE: 3/32" = 1'-0"

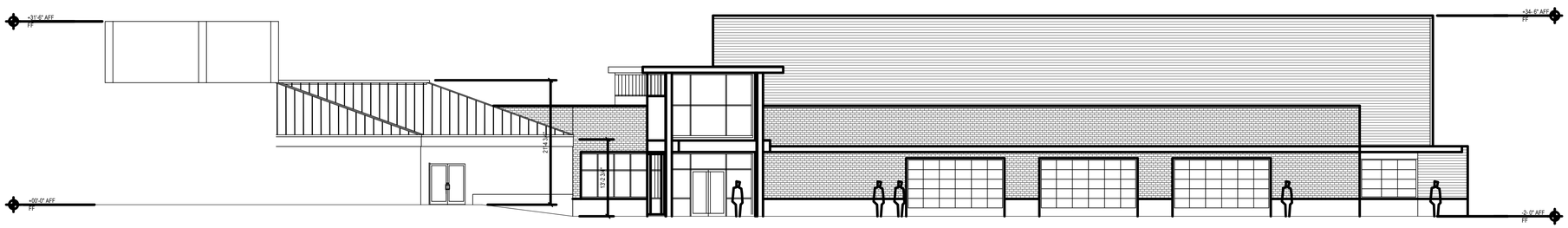

3 OVERALL ~~EAST~~ WEST ELEVATION

SCALE: 3/32" = 1'-0"

KMB architects
906 Columbia Street SW, Suite 400
Olympia, Washington 98501
360.352.8883

10347 REGISTERED ARCHITECT JAMES NEIL PRAGER OF WASHINGTON
NOT FOR CONSTRUCTION

KMB Project # E1626

HEALTH AND WELLNESS CENTER RENOVATION AND ADDITION
SOUTH PUGET SOUND COMMUNITY COLLEGE

2011 MOTTMAN ROAD SW, OLYMPIA, WA 98512
STATE PROJECT NO. 2018-111A

ORIGINAL SHEET SIZE = 24 x 36
HALF SIZE REDUCTIONS = 11 x 17

REVISIONS:

DATE: 05/01/2018

DESIGN DEVELOPMENT

SHEET NO.

A-201

OVERALL EXTERIOR ELEVATIONS

LAST SAVE: rubenrunez, A-201 Overall Exterior Elevations.dwg - May 1, 2018 (5:03 PM)
PLOT: DWG to PDF.pc3, ARCH (full bleed D (36.00 x 24.00 Inches), NCS.ctb - May 2, 2018 (8:37 AM)

CPD RECEIVED 5/4/18

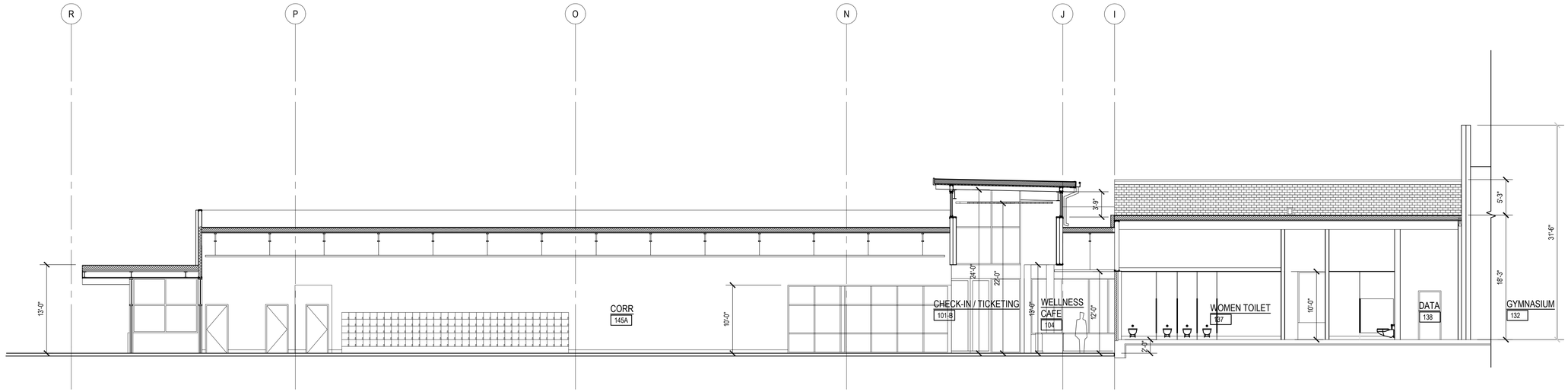

1 BUILDING SECTION @ CORRIDOR

SCALE: 1/8" = 1'-0"

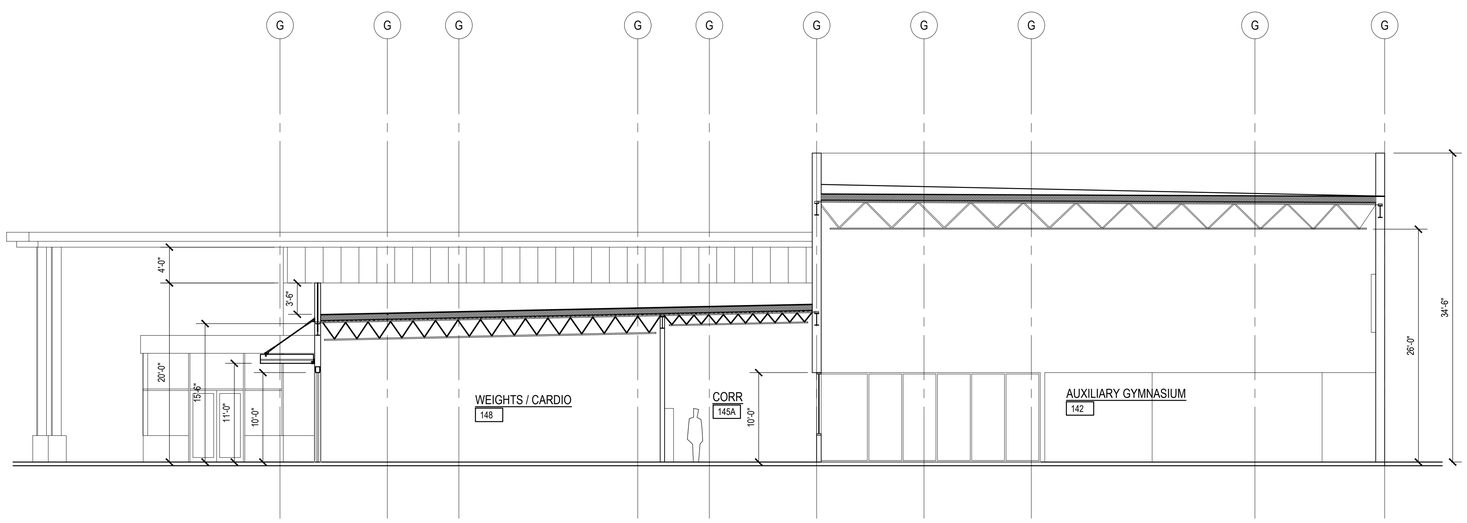

2 BUILDING SECTION SOUTH WING

SCALE: 1/8" = 1'-0"

KMB architects
906 Columbia Street SW, Suite 400
Olympia, Washington 98501
360.352.8883

10347 REGISTERED ARCHITECT JAMES M. KNOX STATE OF WASHINGTON NOT FOR CONSTRUCTION

KMB Project # E1626

HEALTH AND WELLNESS CENTER RENOVATION AND ADDITION
SOUTH PUGET SOUND COMMUNITY COLLEGE

2011 MOTTMAN ROAD SW, OLYMPIA, WA 98512
STATE PROJECT NO. 2018-111A

ORIGINAL SHEET SIZE = 24 x 36
HALF SIZE REDUCTIONS = 11 x 17

REVISIONS:

DATE: 05/01/2018

DESIGN DEVELOPMENT

SHEET NO.

A-301

BUILDING SECTIONS

LAST SAVE: rubenmunoz, A-301 Building Sections.dwg - May 1, 2018 (9:08 AM)
PLOT: DWG To PDF.pc3, ARCH full bleed D (36.00 x 24.00 Inches), NCS.ctb - May 1, 2018 (9:28 AM)

CPD RECEIVED 5/4/18

REFERENCE NOTES SCHEDULE

SYMBOL	DESCRIPTION	QTY
1	PLANTING AREA	2,938 SF
2	LAWN AREA	9,089 SF
3	NEW SCORED CONCRETE	11,625 SF
5	GRAVEL MAINTENANCE EDGE	839 SF

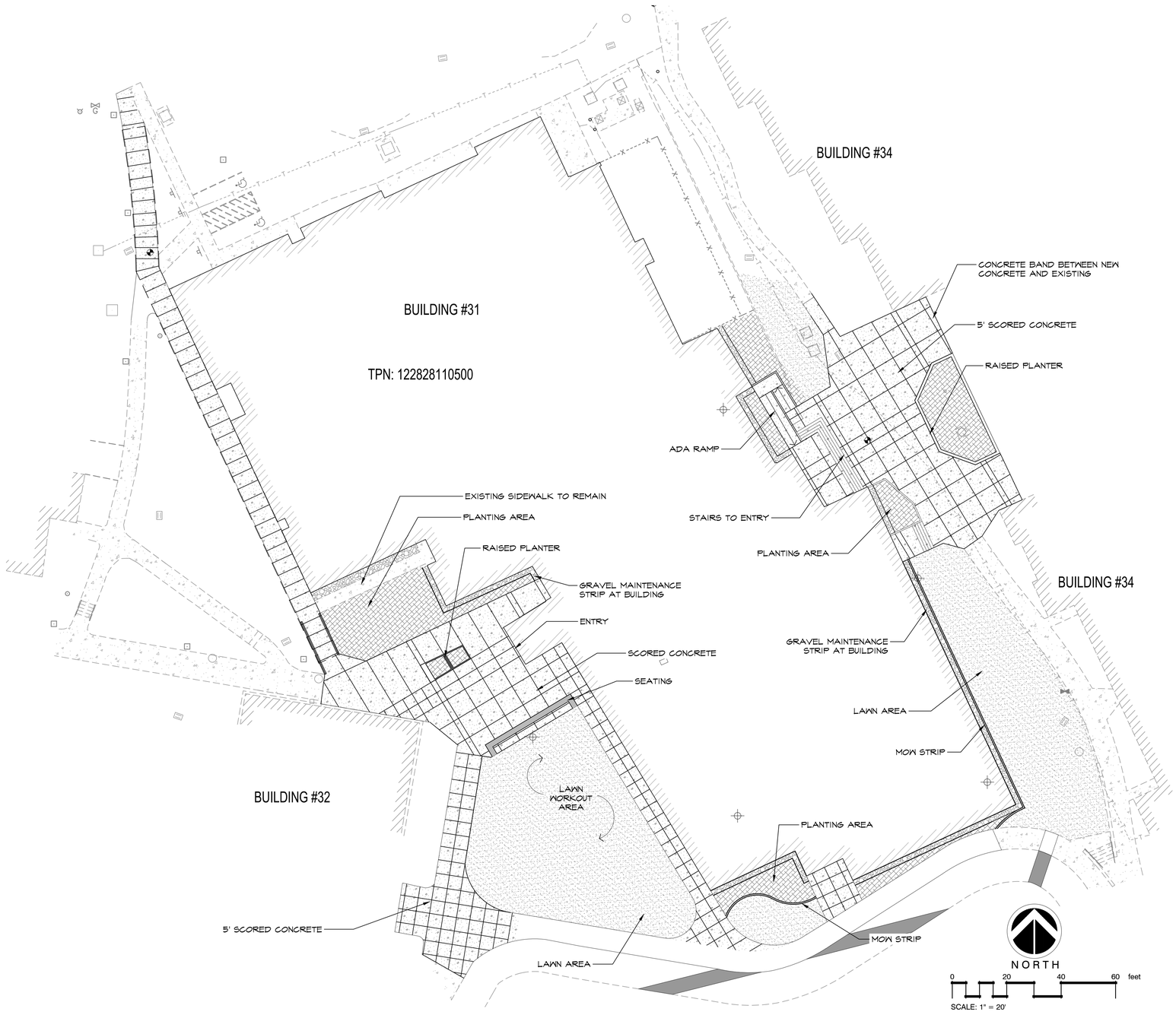

SCJ ALLIANCE
CONSULTING SERVICES
8730 TALLON LANE NE, SUITE 200, LACEY, WA 98516
P: 360.352.1465 F: 360.352.1509
SCJALLIANCE.COM

KMB architects
906 Columbia Street SW, Suite 400
Olympia, Washington 98501
360.352.8883

STATE OF WASHINGTON
JEFFREY B. GLANDER
NO. 405 EXP. 02/06/20/19
LANDSCAPE ARCHITECT

KMB Project # E1626

HEALTH AND WELLNESS CENTER RENOVATION AND ADDITION
SOUTH PUGET SOUND COMMUNITY COLLEGE

2011 MOTTMAN ROAD SW, OLYMPIA, WA 98512
STATE PROJECT NO. 2018-111A

ORIGINAL SHEET SIZE = 24 x 36
HALF SIZE REDUCTIONS = 11 x 17

REVISIONS:

DATE: 05/02/2018

DESIGN DEVELOPMENT

SHEET NO.

L1.01

MATERIAL AND HARDSCAPE PLAN

LAST SAVE: trent.grantham, .0850.17.X.LO.dwg - April 30, 2018 (5:07 PM)
PLOT: \\lay-print.ad.scj.io\Ly Wrk\Rm Blk (Konica C1060), 8.5x11, ---- - April 30, 2018 (5:13 PM)

PLANT SCHEDULE

TREES	QTY	BOTANICAL NAME	CAL.	DESC.
	3	TSUGA MERTENSIANA MOUNTAIN HEMLOCK	B&B/CONT.	4'-6' HT.
	6	ZELKOVA SERRATA 'GREEN VASE' SAWLEAF ZELKOVA	2" CAL.	12'-16' HT.
SHRUBS	**QTY**	**BOTANICAL NAME**	**SIZE**	**SPACING**
	15	AUCUBA JAPONICA 'GOLD DUST' 'GOLD DUST' AUCUBA	5 GAL	4' O.C.
	5	BUXUS SEMPERVIRENS 'FASTIGIATA' UPRIGHT BOXWOOD	5 GAL	
	9	LEUCOTHOE AXILLARIS COAST LEUCOTHOE	5 GAL	4' O.C.
	20	MAHONIA AQUIFOLIUM 'ORANGE FLAME' 'ORANGE FLAME' OREGON GRAPE	5 GAL	4' O.C.
	20	MISCANTHUS SINENSIS 'GHANA' 'GHANA' MISCANTHUS	2 GAL	4' O.C.
	8	NANDINA DOMESTICA 'GULF STREAM' 'GULF STREAM' NANDINA	5 GAL	3' O.C.
	45	PENNISETUM ALOPECUROIDES 'HAMELN' 'HAMELN' FOUNTAIN GRASS	2 GAL	3' O.C.
	17	PLEIOBLASTUS PYGMAEA DWF WHITESTRIP BAMBOO	2 GAL	3' O.C.
	28	RHUS AROMATICA 'GRO-LOW' 'GRO-LOW' FRAGRANT SUMAC	5 GAL	3' O.C.
	79	SYMPHORICARPOS MOLLIS CREEPING SNOWBERRY	1 GAL	3' O.C.
GROUND COVERS	**QTY**	**BOTANICAL NAME**	**SIZE**	**SPACING**
	133	BERGENIA CORDIFOLIA 'RED BEAUTY' 'RED BEAUTY' BEGENIA	1 GAL	@ 2.5' O.C.
	17	MOLINIA CAERULEA 'VARIEGATA' VARIEGATED MOOR GRASS	1 GAL	36" O.C.
	39	RUBUS CALYCINOIDES 'EMERALD CARPET' 'EMERALD CARPET' RUBUS	1 GAL	24" O.C.

SHEET NOTES

1. REFER TO DETAILS AND SPECIFICATIONS FOR ADDITIONAL INFORMATION.
2. NO PLANT SUBSTITUTIONS SHALL BE PERMITTED WITHOUT PRIOR APPROVAL OF LANDSCAPE ARCHITECT/OWNER.
3. ALL WORK SHALL BE PERFORMED TO THE SATISFACTION OF THE LANDSCAPE ARCHITECT/OWNER.
4. PLANT LIST QUANTITIES ARE SHOWN FOR REFERENCE ONLY. CONTRACTOR IS RESPONSIBLE FOR VERIFYING ALL QUANTITIES IN LIST WITH ACTUAL PLAN CALL-OUTS, AND INSTALLING PLANTINGS PER THE LANDSCAPE PLAN. GROUNDCOVER QUANTITIES SHALL BE ADJUSTED AS REQUIRED FOR FIELD CONDITIONS AT THE SPECIFIED SPACING.
5. ALL PLANT SUBSTITUTIONS WILL BE APPROVED BY THE CITY AND LANDSCAPE ARCHITECT PRIOR TO INSTALLATION AND PLANS UPDATED PLANS SHOWING ACCURATE PLANTING MATERIALS WILL BE PROVIDED TO THE CITY PRIOR TO BUILDING OCCUPANCY.
6. THE GEOLOGIC MAP OF THE TUMWATER 7.5-MINUTE QUADRANGLE, THURSTON COUNTY, WASHINGTON (WALSH ET AL. 2003) TO UNDERSTAND THE REGIONAL GEOLOGY IN THE SITE VICINITY. THE GEOLOGIC MAP INDICATES THAT VASHON FINE-GRAINED SEDIMENTS WERE DEPOSITED IN THIS AREA BY GLACIAL LAKE RUSSELL AND OTHER LAKES OF THE VASHON GLACIAL RECESSION. THE FINE-GRAINED DEPOSITS GENERALLY CONSIST OF LACUSTRINE SANDY SILT AND CLAY AND ARE MOST COMMONLY FOUND AT ELEVATIONS BELOW ABOUT ELEVATION 140 FEET (NAVD88) IN THE SOUTH PUGET LOWLAND. GLACIALLY CONSOLIDATED SOILS AT THE SITE ARE MAPPED AS VASHON GLACIAL OUTWASH DEPOSITS CONSISTING OF POORLY TO MODERATELY SORTED SAND AND GRAVEL WITH UNDERLYING LAYERS OF OVERCONSOLIDATED LACUSTRINE SILT AND CLAY.
7. SEE SHEET L1.02 FOR COMPLETE PLANT LIST WITH SIZES, QUANTITIES & COST.
8. ALL AREAS TO BE PLANTED ARE TO BE MULCHED WITH 4 INCHES ORGANIC MATERIAL.
9. LANDSCAPE ARCHITECT SHALL INSPECT THE LANDSCAPING UPON INSTALLATION FOR PLAN COMPLIANCE AND SUBMIT A STATEMENT OF APPROVAL TO THE CITY PRIOR TO BUILDING OCCUPANCY.
10. ALL LANDSCAPING AREAS SHALL BE PLANTED TO ACHIEVE 80% PLANT DENSITY WITHIN 3 YEARS OF PLANTING. ADDITIONAL PLANTINGS MAY BE NECESSARY UPON INSPECTION BY THE CITY.

INSTALLATION & MAINTENANCE SCHEDULE - APPROXIMATE

SEPT 2019 - DEC 2019	SOIL PREPARATION, IRRIGATION INSTALLATION, PLANTING, STAKING, WATERING. SUBSTANTIAL COMPLETION EXPECTED JANUARY 2020.
JAN 2020 - MAR 2020	60-DAY MAINTENANCE PERIOD. WEEKLY MAINTENANCE VISITS AND INSPECTION OF PLANT MATERIAL.
APR 2020	FINAL PUNCH LIST AND ACCEPTANCE OF PROJECT EXPECTED
APR-SEPT 2020	WEEKLY MAINTENANCE VISITS
SEPT - NOV 2020	LEAF AND TREE DEBRIS CLEAN-UP AS NEEDED
OCT 2020 - MARCH 2021	MONTHLY FERTILIZE AND PRUNING AS NEEDED
MARCH - SEPT 2021	WEEKLY MAINTENANCE VISITS
SEPT - NOV 2021	LEAF AND TREE DEBRIS CLEAN-UP AS NEEDED
OCT 2021 - MARCH 2022	MONTHLY FERTILIZE AND PRUNING AS NEEDED
MARCH - SEPT 2022	WEEKLY MAINTENANCE VISITS
SEPT - NOV 2022	LEAF AND TREE DEBRIS CLEAN-UP AS NEEDED
OCT 2022 - MARCH 2023	MONTHLY FERTILIZE AND PRUNING AS NEEDED

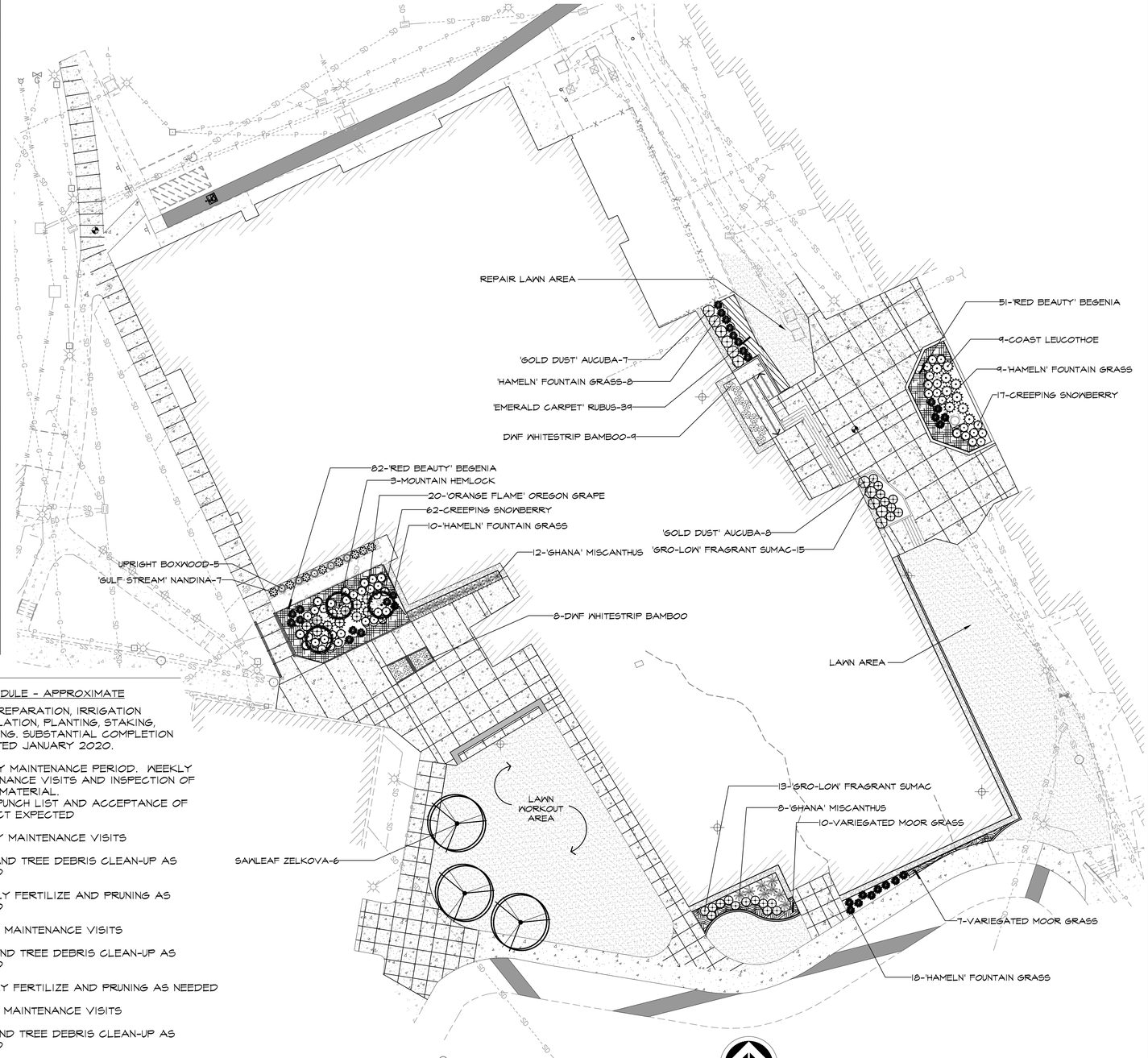

SCJ ALLIANCE
CONSULTING SERVICES
8730 TALLON LANE NE, SUITE 200, LACEY, WA 98516
P: 360.352.1465 F: 360.352.1509
SCJALLIANCE.COM

KMB architects
906 Columbia Street SW, Suite 400
Olympia, Washington 98501
360.352.8883

STATE OF WASHINGTON
JEFFREY B. GLANDER
NO. 405 EXP. 02/06/20
LANDSCAPE ARCHITECT

KMB Project # E1626

HEALTH AND WELLNESS CENTER RENOVATION AND ADDITION
SOUTH PUGET SOUND COMMUNITY COLLEGE

2011 MOTTMAN ROAD SW, OLYMPIA, WA 98512
STATE PROJECT NO. 2018-111A

ORIGINAL SHEET SIZE = 24 x 36
HALF SIZE REDUCTIONS = 11 x 17

REVISIONS:

DATE: 05/02/2018

DESIGN DEVELOPMENT

SHEET NO.

L2.01

LANDSCAPE PLAN

LAST SAVE: trent.grantham, .0860.17.X.LS.dwg - April 30, 2018 (5:04 PM)
PLOT: AutoCAD PDF (General Documentation).pc3, ARCH full bleed D (24.00 x 36.00 Inches), SC-Full.ctb - April 30, 2018 (5:13 PM)

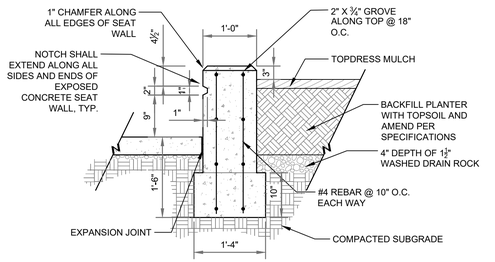

NOTES:

1. CIP CONCRETE SEATWALL WITH LIGHT SANDBLAST FINISH, SMOOTH SACK ALL WALLS PRIOR TO SANDBLASTING. ALL CONCRETE SHALL BE CLASS 3000.

1 RAISED PLANTER

3/4" = 1'-0" P-SC-SPS-24

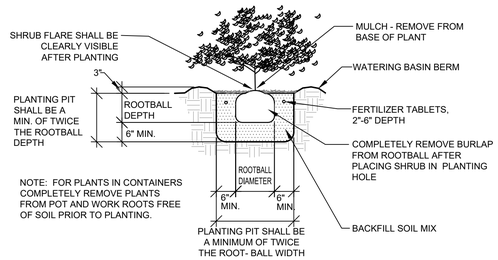

2 SHRUB PLANTING DETAIL (B&B OR CONT.)

NTS P-SC-SPS-14

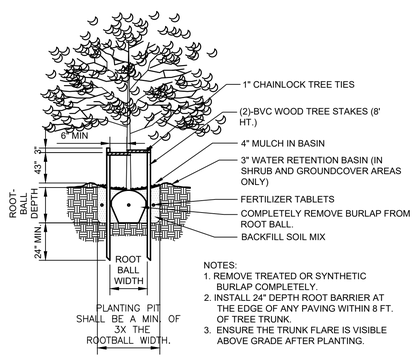

NOTES:
1. REMOVE TREATED OR SYNTHETIC BURLAP COMPLETELY.
2. INSTALL 24" DEPTH ROOT BARRIER AT THE EDGE OF ANY PAVING WITHIN 8 FT. OF TREE TRUNK.
3. ENSURE THE TRUNK FLARE IS VISIBLE ABOVE GRADE AFTER PLANTING.

3 TREE PLANTING & STAKING DETAIL

N.T.S. P-SC-SPS-27

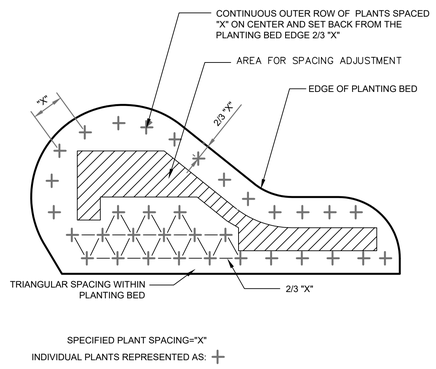

4 PLANT SPACING DETAIL

NTS P-SC-SPS-26

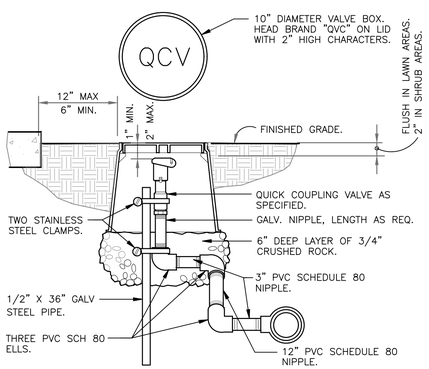

5 QUICK COUPLING VALVE IN BOX

1 1/2" = 1'-0" P-SC-SPS-33

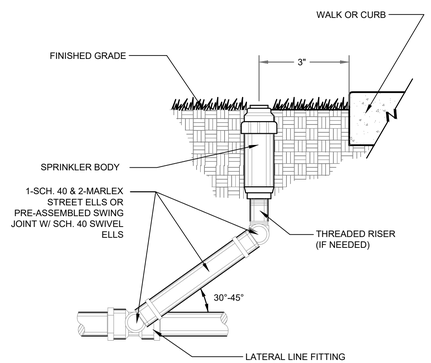

6 POP-UP SPRINKLER HEAD

N.T.S. P-SC-SPS-35

LANDSCAPE SPECIFICATIONS

1. REFER TO DETAILS FOR ADDITIONAL INFORMATION.

2. CHEMICALLY KILL (CHEMICALS MUST MEET WELL HEAD PROTECTION AREAS MINIMUM MITIGATION STANDARDS-SEE THURSTON COUNTY'S INTEGRATED PEST MANAGEMENT PROGRAM) AND REMOVE FROM SITE ALL EXISTING WEEDS AND VEGETATION NOT SHOWN TO REMAIN ON PLANS.

3. DISTRIBUTE IMPORTED SANDY LOAM TOPSOIL (APPROVED BY THE LANDSCAPE ARCHITECT) IN AREAS SHOWN AND AT DEPTHS INDICATED FOR CROWNING AND BERMING OF LANDSCAPE AREAS, AND BACKFILL OF RETAINING WALLS (IF REQUIRED). DOTTED LINES INDICATE 1' CONTOUR INTERVALS. ALL LANDSCAPE AREAS SHALL RECEIVE TOPSOIL, WHETHER INDICATED ON PLANS OR NOT, SO THAT FINISH GRADES OF ALL SHRUB BEDS SHALL BE 2" BELOW TOPS OF ADJACENT CURBS AND PAVEMENT. STRUCTURAL FILL AREAS: ANY LANDSCAPE AREAS OCCURRING WITHIN STRUCTURAL FILL ZONES SHALL HAVE SAID STRUCTURAL FILL MATERIALS EXCAVATED TO A DEPTH OF 12" BELOW FINISH GRADES IN SHRUB AREAS AND 6" BELOW GRADE IN LAWN AREAS, AND REPLACED WITH SPECIFIED TOPSOIL. DISPOSE OF EXCAVATED MATERIAL OFF SITE.

4. FINE GRADE ALL LANDSCAPE BEDS PRIOR TO PLANTING OPERATIONS. ALL NON-COMPOSTABLE MATERIALS SHALL BE REMOVED BY HAND AFTER APPLICATION.

5. NO PLANT SUBSTITUTIONS SHALL BE PERMITTED WITHOUT PRIOR APPROVAL OF LANDSCAPE ARCHITECT AND CITY. ALL PLANT SUBSTITUTIONS WILL BE APPROVED BY THE CITY AND LANDSCAPE ARCHITECT PRIOR TO INSTALLATION. UPDATED PLANS SHOWING ACCURATE PLANTING MATERIALS WILL BE PROVIDED TO THE CITY PRIOR TO BUILDING OCCUPANCY.

6. ALL PLANTS SHALL CONFORM TO THE LATEST EDITION OF THE AMERICAN STANDARD FOR NURSERY STOCK.

7. ALL PLANT MATERIALS AND PLANT LOCATIONS SHALL BE APPROVED BY THE LANDSCAPE ARCHITECT PRIOR TO INSTALLATION. ALL PLANTS SHALL BE THOROUGHLY WATERED IMMEDIATELY AFTER PLANTING WITH ALASKA FISH FERTILIZER SOLUTION.

8. ROOT BARRIER SHALL BE INCORPORATED ADJACENT AND PARALLEL TO PAVING, CURB AND SIDEWALK, A MINIMUM OF 15 LINEAR FEET (7.5' ON EITHER SIDE OF TRUNK), 24" DEEP, WHERE ANY TREE IS WITHIN 8' OF PAVING, CURB OR SIDEWALK. ROOT BARRIER SHALL BE DEEPROOT UB-24 AS AVAILABLE FROM EWING IRRIGATION PRODUCTS, 2901 S TACOMA WAY, TACOMA, WA 98409 (253) 476-9530 OR APPROVED EQUAL.

9. SOIL AMENDMENT FOR SOIL PREPARATION AND PLANTING BACKFILL SHALL BE A SCREENED 5/8" MINUS NITRIFIED WOOD RESIDUAL COMPOST EQUAL TO:
   A. "TOP GRADE COMPOST" BRAND COMPOST AS AVAILABLE FROM SILVER SPRINGS ORGANICS, RAINIER, WA (360) 446-7645.
   B. "CEDAR GROVE COMPOST" BRAND COMPOST AS AVAILABLE FROM CEDAR GROVE COMPOST, MAPLE VALLEY, WA (877) 764-5748.
   C. PREP/LRI COMPOST AS AVAILABLE FROM RANDLES SAND AND GRAVEL, INC., PUYALLUP, WA (253) 537-6828.

   ALL NON-COMPOSTABLE MATERIALS WILL BE REMOVED FROM SITE.

10. SOIL PREPARATION - (ALL LANDSCAPE AREAS) FOR PLANTING BEDS SPREAD 24 C.Y. OF SPECIFIED TOPSOIL MIX PER 1000 S.F. AND AMEND TO A SETTLED DEPTH OF 12" (INCHES). TOPSOIL MIX SHALL CONTAIN 35-40% COMPOST BY VOLUME. SPREAD 150 LBS./1000 S.F. OF AGRICULTURAL GYPSUM AND 1 LBS./1000 S.F. OF 16-8-8 COMMERCIAL FERTILIZER OVER SOIL AMENDMENT. ROTO-TILL ALL OF THE ABOVE TO A 6"-8" DEPTH AND GRADE SMOOTH, COMPACTING AS REQUIRED AND REMOVING ALL ROCKS, CLODS AND DEBRIS. PRIOR TO PLANTING SOILS AND PLANTS SHALL BE INSPECTED BY THE CITY.

11. BACKFILL MIX FOR ALL PLANTS SHALL BE A BLEND OF 1/3 EXISTING SITE SOIL, 1/3 COARSE SAND, AND 1/3 SOIL AMENDMENT SPECIFIED IN NO. 9.

12. ONLY SLOW RELEASE FERTILIZERS SHALL BE APPLIED FOR THE LIFE OF THE DEVELOPMENT AT A MAXIMUM AMOUNT OF 4 LBS OF NITRATE AS NITROGEN ANNUALLY AND NO MORE THAN 1 LB PER APPLICATION FOR EVERY 1,000 SQUARE FEET OF TURF GRASS. ONLY FERTILIZER FORMULAS WITH A MINIMUM OF 50 PERCENT WATER INSOLUBLE FORM OF NITROGEN ARE PERMITTED FOR USE. APPROVED WATER INSOLUBLE FORMS OF NITROGEN INCLUDE SULFUR AND/OR POLYMER COATED FERTILIZERS, ISOBUTYLIDENE DIUREA (IBDU), METHYLENE UREA AND UREAFORM, AND ORGANIC FERTILIZERS REGISTERED WITH WASHINGTON DEPARTMENT OF AGRICULTURE."

13. APPLY OSMOCOTE 18-6-12, 9 MONTH SLOW RELEASE FERTILIZER OVER THE SURFACE OF ALL PLANT PITS AT THE FOLLOWING RATES (NO MORE THAN A MAXIMUM 4LBS. OF NITRATE NITROGEN SHALL BE USED ANNUALLY):

TREES OVER 10' HEIGHT	2 CUPS
TREES UNDER 10' HEIGHT:	1 CUP
ALL SHRUBS EXCEPT 1 GALLONS:	1/2 CUP
1 GALLON PLANTS:	1/4 CUP
GROUND COVERS:	1/4 CUP

14. FERTILIZER TABLETS FOR ALL PLANTS SHALL BE AGRIFORM (20-10-5) 21 GRAM OR 10 GRAM TABLETS DISTRIBUTED AS FOLLOWS: ALL TREES: 4-21 GRAM TABLETS, ALL SHRUBS (EXCEPT 1 GALLONS): 3-21 GRAM TABLETS, ALL 1 GALLONS: 1-21 GRAM TABLET, ALL 2-1/4" AND 4" POT GROUND COVERS: 1-10 GRAM TABLET EACH. SET TABLETS DIRECTLY NEXT TO ROOTBALL.

15. PRIOR TO PLACING MULCH CONTRACTOR SHALL CALL FOR AND HAVE THE CITY INSPECT ALL PLANT MATERIAL. ALL SHRUB AND GROUND COVER BEDS SHALL RECEIVE A 4" DEPTH "MEDIUM/ FINE GRIND" HEM/FIR BARK MULCH AS TOP DRESSING. MULCH SHALL BE PULLED AWAY FROM THE BASE OF ALL SHRUBS AND GROUNDCOVER.

16. APPLY A GRANULAR PRE-EMERGENT HERBICIDE TO ALL SHRUB AND GROUNDCOVER BEDS AT THE CONCLUSION OF THE MAINTENANCE PERIOD. DO NOT USE CASARON OR NORASAC BRANDS. ALL FERTILIZER MUST COMPLY TO MEET WELL HEAD PROTECTION AREAS MINIMUM MITIGATION STANDARDS [OMC 18.32.225(A)(2)(A)]

17. ALL PLANT SUBSTITUTIONS WILL BE APPROVED BY THE CITY AND LANDSCAPE ARCHITECT PRIOR TO INSTALLATION. UPDATED PLANS SHOWING ACCURATE PLANTING MATERIALS WILL BE PROVIDED TO THE CITY PRIOR TO BUILDING OCCUPANCY.

18. ALL PLANTS SHALL BE GUARANTEED FOR ONE (1) YEAR FROM DATE OF PROJECT ACCEPTANCE. ALL REPLACED PLANTS SHALL BE RE-GUARANTEED. ALL REPLACEMENTS SHALL BE MADE WITHIN 21 DAYS OF RECEIVING WRITTEN NOTICE FROM THE OWNER. CONTRACTOR SHALL NOT BE RESPONSIBLE FOR PLANTS DYING DUE TO OWNER NEGLECT OR VANDALISM, AFTER THE MAINTENANCE PERIOD.

19. PLANT LIST QUANTITIES ARE SHOWN FOR REFERENCE ONLY. CONTRACTOR IS RESPONSIBLE FOR VERIFYING ALL QUANTITIES IN LIST WITH ACTUAL PLAN CALL-OUTS, AND INSTALLING PLANTINGS PER THE LANDSCAPE PLAN. GROUNDCOVER AND/OR MASS SHRUB QUANTITIES SHALL BE ADJUSTED AS REQUIRED FOR FIELD CONDITIONS AT THE SPECIFIED SPACING.

20. FINAL INSPECTION SHALL OCCUR AT THE CONCLUSION OF A 60-DAY MAINTENANCE PERIOD. MAINTENANCE PERIOD SHALL COMMENCE UPON COMPLETION OF ALL LANDSCAPE INSTALLATION ACTIVITIES AND SHALL INCLUDE THE FOLLOWING:
   A. REMOVE ALL WEEDS OVER 1" IN HEIGHT, REFER TO THE THURSTON COUNTY'S IPMP FOR ADDITONAL REQUIREMENTS.
   B. REPLACE DEAD OR UNHEALTHY PLANTS.
   C. ENSURE PROPER FUNCTION OF IRRIGATION SYSTEM, SEE OMC 18.32.225.A.2(C) FOR ADDITIONAL REQUIREMENTS.
   D. ENSURE ADEQUATE MOISTURE IS DELIVERED TO ALL LANDSCAPE BEDS INCLUDING NON-IRRIGATED AREAS.
   E. FERTILIZE ALL LAWNS AT CONCLUSION OF MAINTENANCE PERIOD, SEE OMC 18.32.225.A.2(A) FOR ADDITIONAL REQUIREMENTS.

21. ALL APPLICATIONS OF FERTILIZERS AND CHEMICALS SHALL BE RE-EVALUATED PRIOR TO ACTUAL LANDSCAPE INSTALLATION AND MAINTENANCE.

SCJ ALLIANCE
CONSULTING SERVICES
8730 TALLON LANE NE, SUITE 200, LACEY, WA 98516
P: 360.352.1465 F: 360.352.1509
SCJALLIANCE.COM

KMB architects
906 Columbia Street SW, Suite 400
Olympia, Washington 98501
360.352.8883

STATE OF WASHINGTON
JEFFREY B. GLANDER
NO. 405 EXP. 02/06/20
LANDSCAPE ARCHITECT

KMB Project # E1626

HEALTH AND WELLNESS CENTER RENOVATION AND ADDITION
SOUTH PUGET SOUND COMMUNITY COLLEGE

2011 MOTTMAN ROAD SW, OLYMPIA, WA 98512
STATE PROJECT NO. 2018-111A

ORIGINAL SHEET SIZE = 24 x 36
HALF SIZE REDUCTIONS = 11 x 17

REVISIONS:

DATE: 05/02/2018
DESIGN DEVELOPMENT

SHEET NO.
L2.02

LANDSCAPE DETAILS AND SPECIFICATIONS

LAST SAVE: trent.grantham, .0860.17 X-LS.dwg, April 30, 2018 (5:04 PM)
PLOT: AutoCAD PDF (General Documentation).pc3, ARCH full bleed D (24.00 x 36.00 Inches), SC-Full.ctb, April 30, 2018 (5:13 PM)

IRRIGATION SCHEDULE

SYMBOL	MANUFACTURER/MODEL/DESCRIPTION	PSI	DETAIL
10 10 10 10 Q T H F	HUNTER PROS-04-CV 10' RADIUS TURF SPRAY, 4.0" POP-UP. WITH DRAIN CHECK VALVE. CO-MOLDED WIPER SEAL WITH UV RESISTANT MATERIAL.	30	6/W1L2.02
12 12 12 12 12 12 Q T H TT TQ F	HUNTER PROS-04-CV 12' RADIUS TURF SPRAY, 4.0" POP-UP. WITH DRAIN CHECK VALVE. CO-MOLDED WIPER SEAL WITH UV RESISTANT MATERIAL.	30	6/W1L2.02
15 15 15 15 15 15 Q T H TT TQ F	HUNTER PROS-04-CV 15' RADIUS TURF SPRAY, 4.0" POP-UP. WITH DRAIN CHECK VALVE. CO-MOLDED WIPER SEAL WITH UV RESISTANT MATERIAL.	30	6/W1L2.02
17 17 17 Q H F	HUNTER PROS-04-CV 17' RADIUS TURF SPRAY, 4.0" POP-UP. WITH DRAIN CHECK VALVE. CO-MOLDED WIPER SEAL WITH UV RESISTANT MATERIAL.	30	6/W1L2.02
4 6 8 10 12 15 17	HUNTER PROS-04-CV ADJ TURF SPRAY, 4.0" POP-UP. WITH DRAIN CHECK VALVE. CO-MOLDED WIPER SEAL WITH UV RESISTANT MATERIAL.	30	6/W1L2.02
SYMBOL	MANUFACTURER/MODEL/DESCRIPTION		DETAIL
□	HUNTER PCZ-101-25 DRIP CONTROL VALVE KIT. 1" PGV GLOBE VALVE WITH 1" HY100 FILTER SYSTEM. PRESSURE REGULATION: 25PSI. FLOW RANGE: 0.5 GPM TO 15 GPM. 150 MESH STAINLESS STEEL SCREEN.		6/L3.02
	TECHLINE START CONNECTION LATERAL TO DRIP ZONE TUBING WITH SWING JOINT ASSEMBLY		7/L3.02
	AREA TO RECEIVE DRIPLINE NETAFIM TLCV-06-18 TECHLINE PRESSURE COMPENSATING LANDSCAPE DRIPLINE WITH CHECK VALVE. 0.6 GPH EMITTERS AT 18" O.C. DRIPLINE LATERALS SPACED AT 18" APART, WITH EMITTERS OFFSET FOR TRIANGULAR PATTERN. 17MM.		5/L3.02
SYMBOL	MANUFACTURER/MODEL/DESCRIPTION		DETAIL
⬡	HUNTER ICV-G 1", 1-1/2", 2", AND 3" PLASTIC ELECTRIC REMOTE CONTROL VALVES, GLOBE CONFIGURATION, WITH NPT THREADED INLET/OUTLET, FOR COMMERCIAL/MUNICIPAL USE.		2/L3.02
◪	HUNTER HQ-33DRC QUICK COUPLER VALVE, YELLOW RUBBER COVER, RED BRASS AND STAINLESS STEEL, WITH 3/4" NPT INLET, 2-PIECE BODY.		5/W1L2.02
⧗	MATCO-NORCA 759 BRASS SHUT OFF BALL VALVE, 1/2" TO 4". TWO PIECE BODY, BLOW-OUT PROOF STEM, CHROME PLATED SOLID BRASS BALL, THREADED, WITH PTFE SEATS. SAME SIZE AS MAINLINE PIPE.		3/L3.02
D	DRAIN VALVE WILKINS #200 3/4" ANGLE VALVE FOR MANUAL DRAIN VALVE ASSEMBLY W/ KEY EXTENSION		8/L3.02
BF	FEBCO 850 1" DOUBLE CHECK BACKFLOW PREVENTION, 1/2" TO 2"		1/L3.02
C	HUNTER PC-400 WITH (02) PCM-300 LIGHT COMMERCIAL & RESIDENTIAL CONTROLLER, 10-STATION EXPANDED MODULE CONTROLLER, 120 VAC, OUTDOOR MODEL		
SS	HUNTER WSS-SEN WIRELESS SOLAR, RAIN FREEZE SENSOR WITH OUTDOOR INTERFACE, CONNECTS TO HUNTER X-CORE AND ACC CONTROLLERS, INSTALL AS NOTED. INCLUDES GUTTER MOUNT BRACKET. MODULE NOT INCLUDED.		
M	WATER METER 1" SYSTEM DESIGNED AT XX PSI, FIELD VERIFY EXACT PRESSURE ON SITE		
———	IRRIGATION LATERAL LINE: PVC CLASS 200 SDR 21 12" BELOW GRADE, 24" BELOW PAVED AREAS		
— — — —	IRRIGATION MAINLINE: PVC SCHEDULE 40 18" BELOW GRADE, 24" BELOW PAVED AREAS		
= = = = = = = =	PIPE SLEEVE: PVC CLASS 200 SDR 21 BURY 24" BELOW GRADE		

Valve Callout

#	
#"	#

Valve Number
Valve Flow
Valve Size

REFERENCE NOTES SCHEDULE

SYMBOL	IRRIGATION DESCRIPTION
I-101	IRRIGATION PLAN IS DIAGRAMMATIC. INSTALL ALL PIPES, VALVES, HEADS AND OTHER IRRIGATION EQUIPMENT WITHIN PROJECT LIMITS AND IN LANDSCAPE BEDS WHEN POSSIBLE.
I-102	IRRIGATION POINT OF CONNECTION AT NEW 1" METER. SYSTEM DESIGNED AT 65 PSI, FIELD VERIFY EXACT PRESSURE.
I-103	INSTALL IRRIGATION CONTROLLER IN BUILDING AS DIRECTED. GENERAL CONTRACTOR SHALL PROVIDE POWER SOURCE FOR CONTROLLER. VERIFY LOCATION AND POWER SOURCE WITH OWNER'S REPRESENTATIVE.

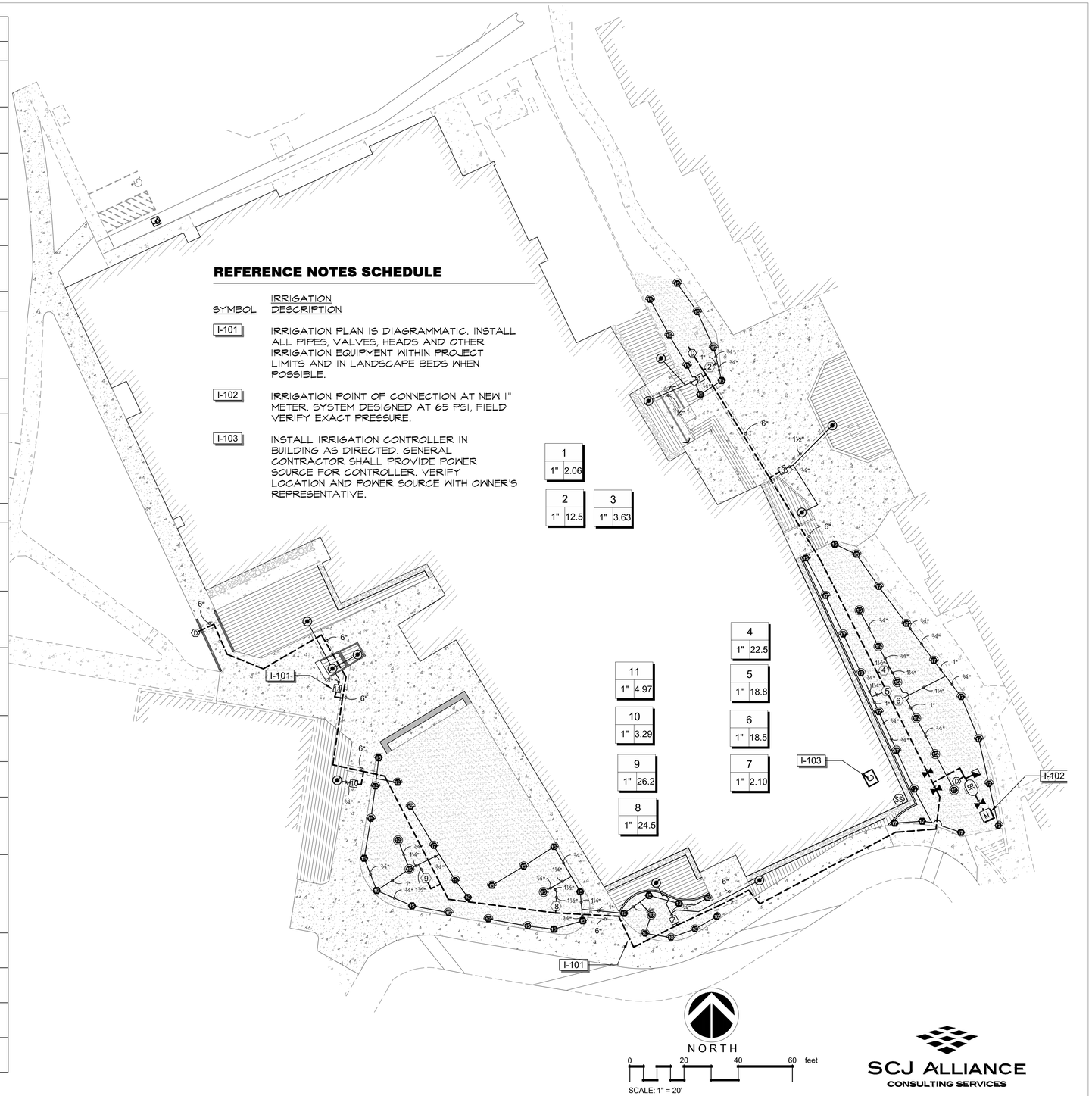

SCJ ALLIANCE
CONSULTING SERVICES
8730 TALLON LANE NE, SUITE 200, LACEY, WA 98516
P: 360.352.1465 F: 360.352.1509
SCJALLIANCE.COM

KMB architects
906 Columbia Street SW, Suite 400
Olympia, Washington 98501
360.352.8883

STATE OF WASHINGTON JEFFREY B. GLANDER NO. 405 EXP. 02/06/20/19 LANDSCAPE ARCHITECT

KMB Project # E1626

HEALTH AND WELLNESS CENTER RENOVATION AND ADDITION
SOUTH PUGET SOUND COMMUNITY COLLEGE

2011 MOTTMAN ROAD SW, OLYMPIA, WA 98512
STATE PROJECT NO. 2018-111A

ORIGINAL SHEET SIZE = 24 x 36
HALF SIZE REDUCTIONS = 11 x 17

REVISIONS:

DATE: 05/02/2018

DESIGN DEVELOPMENT

SHEET NO.

L3.01

IRRIGATION PLAN

LAST SAVE: trent.grantham, (9863.17 X-IR.dwg - April 30, 2018 (5:11 PM))
PLOT: \\lcy-print.ad.sci.\ol\Lcy\Wrkfrm Blk (Kontia C1060), 8.5x11, ---- April 30, 2018 (5:14 PM))

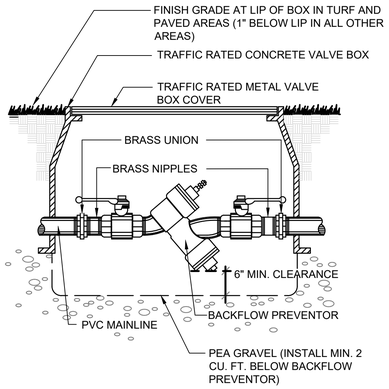

1 DOUBLE CHECK VALVE (DCVA)

NTS P-SC-SPS-13

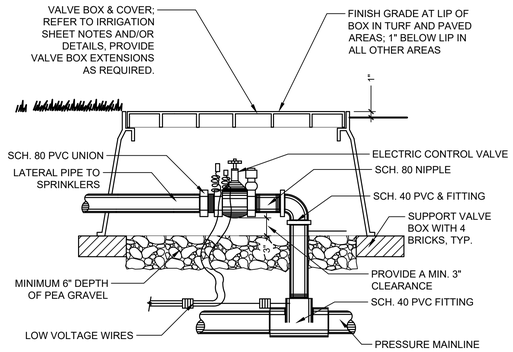

NOTE: ALL WIRES TO BE INSTALLED AS PER LOCAL CODES. NO "IN-LINE" WIRE SPLICES ALLOWED. TAPE AND BUNDLE WIRES EVERY 20 FEET. PROVIDE EXPANSION COILS AT EACH VALVE - WRAPPING WIRE AROUND 1/2" PIPE 15 TIMES. ALL THREADED CONNECTIONS SHALL BE MADE WITH TEFLON TAPE.

2 ELECTRONIC CONTROL VALVE

NTS P-SC-SPS-12

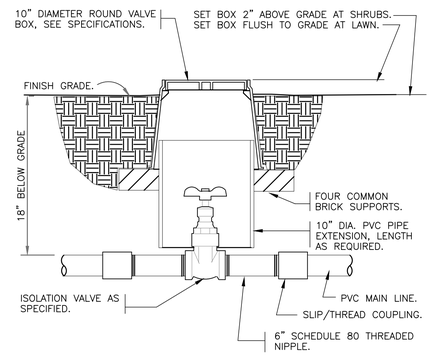

3 BRASS ISOLATION VALVE

1 1/2" = 1'-0" P-SC-SPS-15

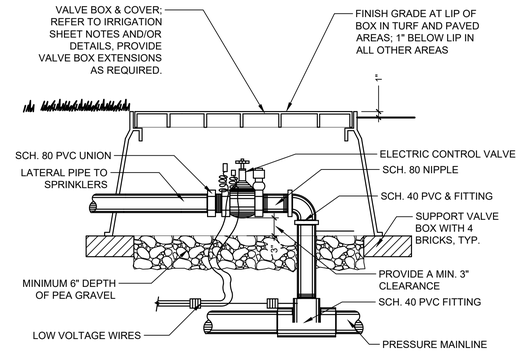

NOTE: ALL WIRES TO BE INSTALLED AS PER LOCAL CODES. NO "IN-LINE" WIRE SPLICES ALLOWED. TAPE AND BUNDLE WIRES EVERY 20 FEET. PROVIDE EXPANSION COILS AT EACH VALVE - WRAPPING WIRE AROUND 1/2" PIPE 15 TIMES. ALL THREADED CONNECTIONS SHALL BE MADE WITH TEFLON TAPE.

4 ELECTRONIC CONTROL VALVE

NTS P-SC-SPS-17

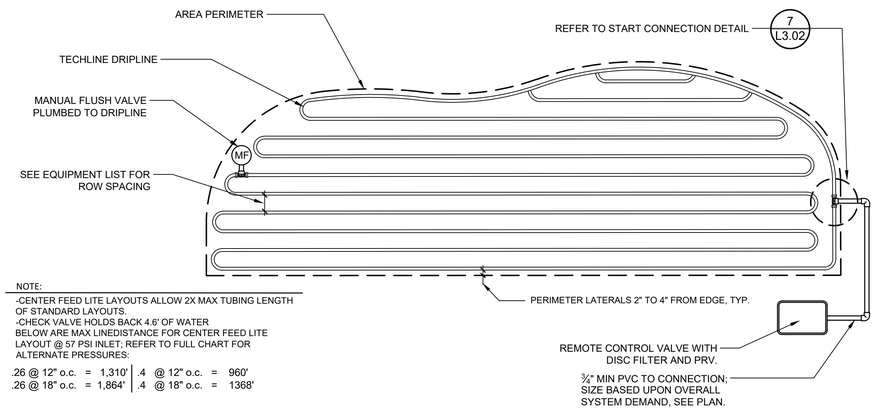

NOTE:
-CENTER FEED LITE LAYOUTS ALLOW 2X MAX TUBING LENGTH OF STANDARD LAYOUTS.
-CHECK VALVE HOLDS BACK 4.6' OF WATER BELOW ARE MAX LINEDISTANCE FOR CENTER FEED LITE LAYOUT @ 57 PSI INLET; REFER TO FULL CHART FOR ALTERNATE PRESSURES:

.26 @ 12" o.c. = 1,310' | .4 @ 12" o.c. = 960'
.26 @ 18" o.c. = 1,864' | .4 @ 18" o.c. = 1368'

5 TECHLINE CV LITE IRREGULAR AREAS

N.T.S. P-SC-SPS-18

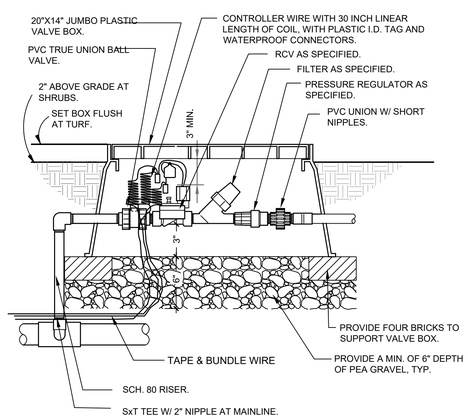

6 DRIP VALVE/FILTER/REGULATOR

N.T.S. P-SC-SPS-19

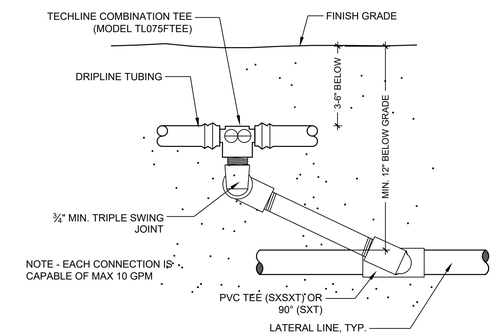

7 TECHLINE START CONNECTION (SWING JOINT RISER)

N.T.S. P-SC-SPS-20

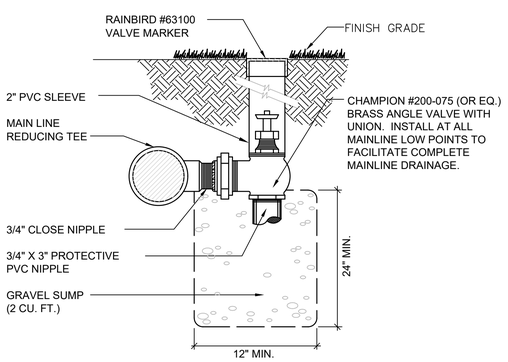

8 MANUAL DRAIN VALVE DETAIL

NTS P-SC-SPS-22

IRRIGATION SPECIFICATIONS

1. THIS PLAN IS DIAGRAMMATIC; ALL PIPING, VALVES, ETC. SHALL BE INSTALLED IN SHRUB BEDS WHERE POSSIBLE AND SHALL FOLLOW THE PLAN AS CLOSE AS IS PRACTICAL.
2. LOCATE ALL MAINLINES WITHIN THE PROJECT LIMITS.
3. PIPE SIZES ARE CONSTANT BETWEEN PIPE SIZE CALL-OUTS. ALL LATERAL PIPES SHALL BE INSTALLED AT 12" DEPTH AND 24" DEPTH UNDER PAVED AREAS. MAINLINE PIPE SHALL BE INSTALLED AT 18" BELOW GRADE AND 24" BELOW PAVED AREAS.
4. REFER TO DETAILS FOR ADDITIONAL INFORMATION.
5. ALL PIPING AND WIRING UNDER PAVED AREAS SHALL BE HOUSED IN CLASS 200 PVC SLEEVES INSTALLED AT A 24" DEPTH. SIZE SLEEVES AS NEEDED TO ACCOMMODATE PIPE AND WIRES, UNLESS OTHERWISE SPECIFIED ON DRAWING.
6. CONTRACTOR SHALL MAKE FIELD ADJUSTMENTS AS NEEDED TO OBTAIN FULL COVERAGE. LANDSCAPE ARCHITECT RESERVES THE RIGHT TO MAKE NOZZLE CHANGES AS NEEDED AT NO ADDITIONAL COST. ADJUST HEAD POSITIONS AND ADD OR DELETE HEADS AS NEEDED DEPENDING ON ACTUAL FIELD CONDITIONS.
7. ALL MANUAL, GATE AND ELECTRICAL VALVES AND OTHER UNDERGROUND EQUIPMENT SHALL BE HOUSED IN NELSON, AMETEK OR EQUAL RECTANGULAR VALVE BOXES.
8. NO IN-LINE WIRE SPLICES ALLOWED. SUPPLY VALVE BOXES AT ALL ELECTRICAL JUNCTIONS. TAPE AND BUNDLE WIRES EVERY 25 LINEAR FEET.
9. CONTRACTOR IS RESPONSIBLE FOR COMPLETE SYSTEM DRAINAGE. INSTALL KING BROS. 1/2" AUTOMATIC DRAIN VALVES AT LATERAL LINE LOW POINT(S). INSTALL MANUAL DRAINS AT ALL MAINLINE LOW POINT(S) AND WHERE INDICATED ON PLAN. CONTRACTOR SHALL PROVIDE ADJUSTABLE CHECK VALVES ON ANY IRRIGATION HEAD THAT EXPERIENCES LOW HEAD DRAINAGE.
10. ALL THREADED PIPE CONNECTIONS SHALL BE MADE USING TEFLON TAPE WRAPPED AT LEAST THREE TIMES AROUND PIPE THREADS.
11. ALL GATE AND ELECTRIC VALVES SHALL BE INSTALLED WITH UNIONS ON THE DOWNSTREAM END OF THE VALVE (REFER TO DETAILS).
12. ALL PIPE SHALL HAVE A FIRM UNIFORM BEARING FOR THE ENTIRE LENGTH OF EACH LINE, FREE OF ROCKS OR DEBRIS. ALL TRENCHES CONTAINING PIPE AND/OR WIRES SHALL BE BACKFILLED WITH CLEAN TOPSOIL, FREE OF ALL LUMBER, RUBBISH AND ROCKS OVER 1" IN SIZE, OR CLEAN SAND IF CLEAN TOPSOIL IS NOT AVAILABLE.
13. CONTRACTOR SHALL PROVIDE OWNER WITH ONE SET OF AS-BUILT RECORD DRAWINGS SHOWING EXACT ACTUAL LOCATIONS OF ALL SPRINKLER EQUIPMENT. CONTRACTOR SHALL ORIENT OWNER WITH COMPLETE SYSTEM AND CONTROLLER OPERATIONS, AND WINTERIZATION PROCEDURES.
14. CONTRACTOR SHALL SUPPLY AND INSTALL ALL EQUIPMENT SHOWN ON THE PLANS AND INDICATED IN THE SPECIFICATIONS TO ACHIEVE PROPER OPERATION OF SAID EQUIPMENT. ALL EQUIPMENT INSTALLATIONS, ELECTRICAL AND PLUMBING CONNECTIONS SHALL BE IN CONFORMANCE WITH ALL APPLICABLE CODES AND ORDINANCES. THESE SPECIFICATIONS, AND THE MANUFACTURERS RECOMMENDATIONS WHETHER INDICATED ON THE DRAWINGS OR NOT.
15. CONTRACTOR SHALL INCLUDE IN HIS BID ONE FALL WINTERIZATION AND ONE SPRING ACTIVATION OF IRRIGATION SYSTEM. THESE ACTIVITIES SHALL BE INCLUDED AS PART OF OWNER ORIENTATION PROCEDURES. ANY DAMAGE TO THE IRRIGATION SYSTEM OR THE LANDSCAPE AS A RESULT OF FAILURE TO COMPLY WITH THESE REQUIREMENTS SHALL BE THE SOLE RESPONSIBILITY OF THE CONTRACTOR.
16. CONTRACTOR SHALL GUARANTEE IN WRITING ON HIS COMPANY LETTERHEAD ALL MATERIALS AND WORKMANSHIP FOR A PERIOD OF ONE FULL YEAR FOLLOWING ACCEPTANCE OF SYSTEM INSTALLATION.
17. BACKFLOW PREVENTOR SHALL BE INSPECTED AND TESTED BY A CERTIFIED BACKFLOW DEVICE INSPECTOR. PROVIDE OWNER WITH ONE COPY OF APPROVAL CERTIFICATE.

SCJ ALLIANCE
CONSULTING SERVICES
8730 TALLON LANE NE, SUITE 200, LACEY, WA 98516
P: 360.352.1465 F: 360.352.1509
SCJALLIANCE.COM

KMB architects
906 Columbia Street SW, Suite 400
Olympia, Washington 98501
360.352.8883

STATE OF WASHINGTON JEFFREY B. GLANDER NO. 405 EXP. 02/06/20 LANDSCAPE ARCHITECT

KMB Project # E1626

HEALTH AND WELLNESS CENTER RENOVATION AND ADDITION
SOUTH PUGET SOUND COMMUNITY COLLEGE

2011 MOTTMAN ROAD SW, OLYMPIA, WA 98512
STATE PROJECT NO. 2018-111A

ORIGINAL SHEET SIZE = 24 x 36
HALF SIZE REDUCTIONS = 11 x 17

REVISIONS:

DATE: 05/02/2018

DESIGN DEVELOPMENT

SHEET NO.

L3.02

IRRIGATION DETAILS

LAST SAVE: trent.greenham, 0863.17.X-IR.dwg - April 30, 2018 (5:11 PM)
PLOT: \\lcy-print.ad.scj.io\Lcy\Wildfirm Blk (Konica C1060), 8.5x11, ---- April 30, 2018 (5:14 PM)

Pennisetum alopecuroides 'Hameln'

Bergenia cordifolia 'Red Beauty'

Aucuba japonica 'Gold Dust'

Leucothoe axillaris

Mahonia aquifolium 'Orange Flame'

Symphoricarpos mollis

Rubus calycinoides 'Emerald Carpet'

Miscanthus sinensis 'GHANA'

Molinia caerulea 'Variegata'

Rhus aromatica 'Gro-Low'

Zelkova serrata 'Green Vase'

Tsuga mertensiana

Buxus sempervirens 'Fastigiata'

SCJ ALLIANCE
CONSULTING SERVICES
8730 TALLON LANE NE, SUITE 200, LACEY, WA 98516
P: 360.352.1465 F: 360.352.1509
SCJALLIANCE.COM

KMB architects
906 Columbia Street SW, Suite 400
Olympia, Washington 98501
360.352.8883

STATE OF WASHINGTON
JEFFREY B. GLANDER
NO. 405 EXP. 02/06/2019
LANDSCAPE ARCHITECT

KMB Project # E1626

HEALTH AND WELLNESS CENTER RENOVATION AND ADDITION
SOUTH PUGET SOUND COMMUNITY COLLEGE
2011 MOTTMAN ROAD SW, OLYMPIA, WA 98512
STATE PROJECT NO. 2018-111A

ORIGINAL SHEET SIZE = 24 x 36
HALF SIZE REDUCTIONS = 11 x 17

REVISIONS:

DATE: 05/02/2018

DESIGN DEVELOPMENT

SHEET NO.

L2.03

PLANT PHOTOS

LAST SAVE: trent.grantham, 0850.17.X-LS.dwg - April 30, 2018 (5:04 PM)
PLOT: AutoCAD PDF (General Documentation).pc3, ARCH full bleed D (24.00 x 36.00 Inches), SC-Full.ctb - April 30, 2018 (5:14 PM)

CPD RECEIVED 5/4/18

34 TECH. EDUCATIO

35
NATURAL
SCIENCES

TOPOGRAPHIC SURVEY
IN
SECTION 28, TOWNSHIP 18N, RANGE 2 WEST, W.M.

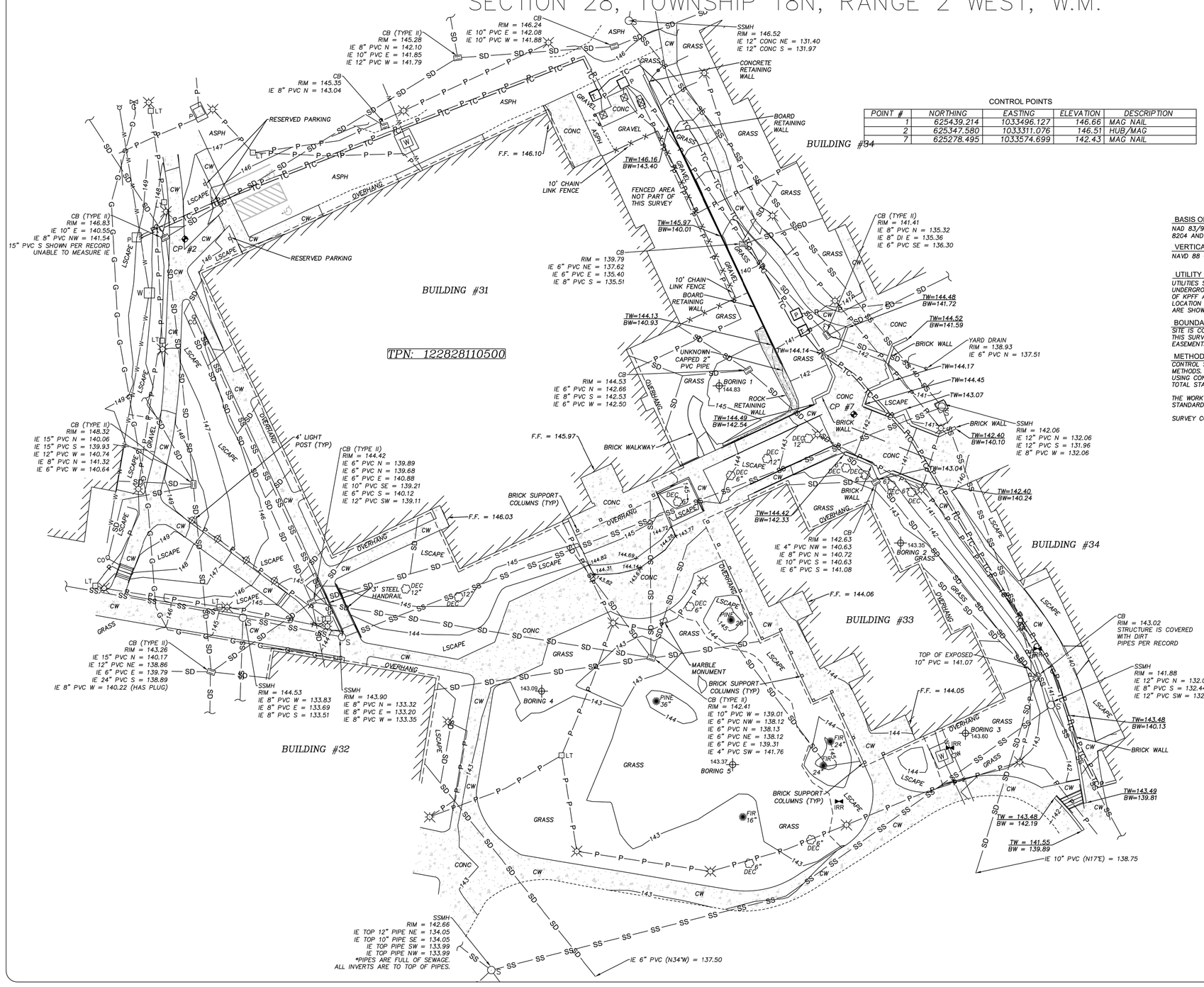

CONTROL POINTS

POINT #	NORTHING	EASTING	ELEVATION	DESCRIPTION
1	625439.214	1033496.127	146.66	MAG NAIL
2	625347.580	1033311.076	146.51	HUB/MAG
7	625278.495	1033574.699	142.43	MAG NAIL

BASIS OF MERIDIAN:
NAD 83/91 – PER THURSTON COUNTY HIGH PRECISION NETWORK CONTROL POINTS 8204 AND 476AZ.

VERTICAL DATUM:
NAVD 88 – PER THURSTON COUNTY HIGH PRECISION NETWORK CONTROL POINT 8204.

UTILITY NOTE:
UTILITIES SHOWN HEREON ARE PER KPFF SITE SURVEY OF SURFACE FEATURES, UNDERGROUND LOCATES PERFORMED BY KPFF, AND AS–BUILTS ON FILE AT THE OFFICE OF KPFF AND SHOULD BE CONSIDERED APPROXIMATE ONLY. STEPS TO CONFIRM LOCATION PRIOR TO CONSTRUCTION SHOULD BE TAKEN. ROOF DRAIN CONNECTIONS ARE SHOWN PER RECORD.

BOUNDARY NOTE:
SITE IS CONTAINED WITHIN THE SOUTH PUGET SOUND COMMUNITY COLLEGE OWNERSHIP. THIS SURVEY MAKES NO DETERMINATION RELATING TO BOUNDARY, RIGHT OF WAY, OR EASEMENTS THAT MAY AFFECT THE SITE AREA.

METHOD OF SURVEY:
CONTROL SURVEY PERFORMED USING TOPCON GR–5 GPS RECEIVERS USING RTK METHODS. CONVENTIONAL FIELD TRAVERSE AND TOPOGRAPHIC SURVEY PERFORMED USING CONVENTIONAL GROUND METHODS WITH THE USE OF A TOPCON PS101 ROBOTIC TOTAL STATION.

THE WORK PERFORMED DURING THE COURSE OF THIS SURVEY MEETS OR EXCEEDS THE STANDARDS AS SET FORTH IN WAC 332–130–090.

SURVEY COMPLETED IN FEBRUARY OF 2018.

LEGEND

- CONTROL POINT
- P — POWER VAULT
- POWER TRANSFORMER
- LT — LIGHT JUNCTION BOX
- LUMINARE
- WALKWAY LIGHT
- T — TELEPHONE VAULT
- FIRE HYDRANT
- W — WATER VAULT
- W — WATER METER
- IRR — IRRIGATION VALVE
- G — GAS VALVE
- G — GAS METER
- S — SANITARY SEWER MANHOLE
- CO — SEWER CLEANOUT
- CATCH BASIN
- CO — STORM CLEANOUT
- SIGN AS NOTED
- BOLLARD
- BORING LOCATION
- SPECIES SIZE — CONIFER
- SPECIES SIZE — DECIDUOUS
- LARGE BUSH
- G — GAS LINE
- W — WATER LINE
- SS — SANITARY SEWER
- SD — STORM DRAIN
- P — UNDERGROUND POWER
- TC — UNDERGROUND COMMUNICATIONS
- EDGE OF PAVEMENT
- X — X — FENCE AS NOTED
- BUILDING HATCH
- ROCK HATCH
- CONCRETE HATCH

SURVEYORS CERTIFICATE

I HEREBY CERTIFY THAT THIS MAP IS AN ACCURATE REPRESENTATION MADE BY ME OR UNDER MY DIRECTION.

JEREME F. CHAPMAN
PROFESSIONAL LAND SURVEYOR
CERTIFICATE NO. 45779

DATE

JEREME F. CHAPMAN
STATE OF WASHINGTON
45779
REGISTERED PROFESSIONAL LAND SURVEYOR

kpff
612 Woodland Square Loop SE,
Suite 100
Lacey, WA 98503
360.392.7230
www.kpff.com

TOPOGRAPHIC SURVEY
OF A PORTION OF
SEC. 28 TWP 18 N, R 2 W, W.M.,
AT THE REQUEST OF
DEPT. OF ENTERPRISE SERVICES

SCALE: 1" = 20'
JOB: 81800001
DATE: 2/13/2018
SHEET 1 OF 1

EX-01

SEC. 28, T18N., R2W., W.M.

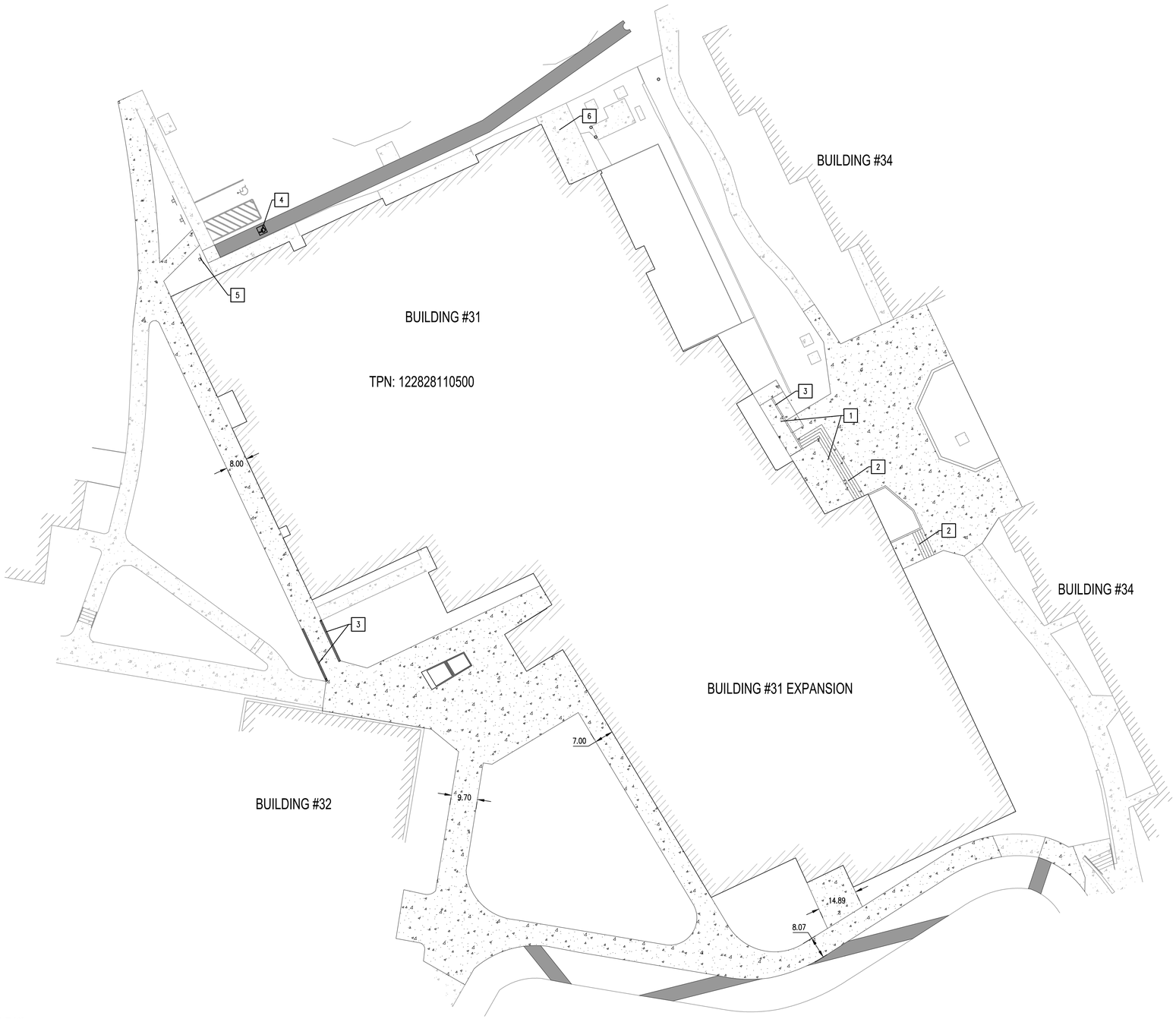

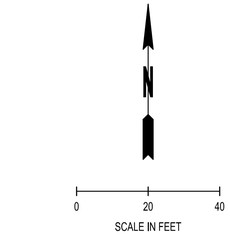

LEGEND

- PROPOSED BUILDING
- CONCRETE SIDEWALK
- ASPHALT PAVEMENT

XX CONSTRUCTION NOTES:

1. SIDEWALK ENTRANCE WITH RAMP AND LANDING (SEE ENLARGEMENT ON SHEET CG-01)
2. STEPS TO BE CONSTRUCTED PER ARCHITECTURAL PLANS
3. ADA RAMP HANDRAIL PER ARCHITECTECTURAL PLANS
4. ACCESSIBILITY SYMBOL, 4" WIDE STRIPING PAINT 2 COATS WHITE W/ 7 MIL. DFT PER COAT
5. REPLACE RESERVED PARKING SIGN
6. EXISTING SOLID WASTE RECEPTACLE TO REMAIN

CALL BEFORE YOU DIG

THE CONTRACTOR SHALL BE FULLY RESPONSIBLE FOR THE LOCATION AND PROTECTION OF ALL EXISTING UTILITIES. THE CONTRACTOR SHALL VERIFY ALL UTILITY LOCATIONS PRIOR TO CONSTRUCTION BY CALLING THE UNDERGROUND LOCATE LINE AT (800) 424-5555 A MINIMUM OF 48 HOURS PRIOR TO ANY EXCAVATION.

SCJ ALLIANCE
CONSULTING SERVICES
8730 TALLON LANE NE, SUITE 200, LACEY, WA 98516
P: 360.352.1465 F: 360.352.1509
SCJALLIANCE.COM

KMB architects
906 Columbia Street SW, Suite 400
Olympia, Washington 98501
360.352.8883

ROSS D. JARVIS
STATE OF WASHINGTON
43668
REGISTERED
PROFESSIONAL ENGINEER

KMB Project # E1626

HEALTH AND WELLNESS CENTER RENOVATION AND ADDITION
SOUTH PUGET SOUND COMMUNITY COLLEGE

2011 MOTTMAN ROAD SW, OLYMPIA, WA 98512
STATE PROJECT NO. 2018-111A

ORIGINAL SHEET SIZE = 24 x 36
HALF SIZE REDUCTIONS = 11 x 17

REVISIONS:

DATE: 05/02/2018

DESIGN DEVELOPMENT

SHEET NO.

SP-01

SITE IMPROVEMENT PLAN

LAST SAVE: mallory.dobbs, 9850.17 SP-01.dwg, May 3, 2018 (4:09 PM)
PLOT: \\lay-print.ad.scj.io\Ly WideFm Blk (Konica C1060), 8.5x11, ----, May 3, 2018 (4:10 PM)

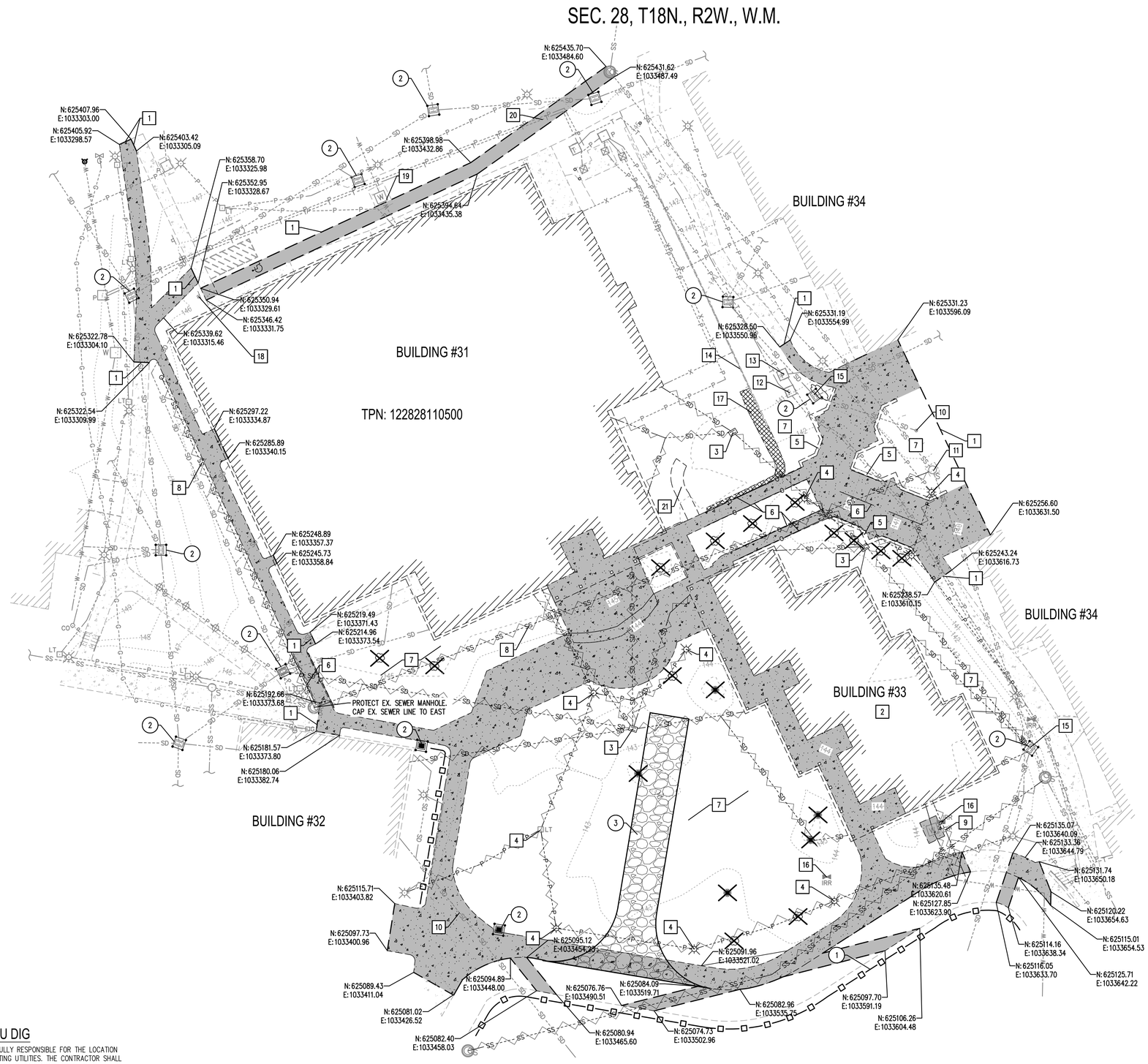

LEGEND

- STABILIZED CONSTRUCTION ENTRANCE
- INLET SEDIMENT PROTECTION
- SILT FENCE
- SAWCUT
- EXISTING CONCRETE/ASPHALT/SIDEWALK/CURB AND BASE TO BE REMOVED
- EXISTING TREE TO BE REMOVED
- REMOVE EXISTING STORM LINE AND BACKFILL TO 95%
- REMOVE EXISTING POWER LINE AND BACKFILL TO 95%
- REMOVE EXISTING SEWER LINE AND BACKFILL TO 95%
- REMOVE EXISTING WATER LINE AND BACKFILL TO 95%

(XX) EROSION CONTROL NOTES:

1. SILT FENCE
2. INLET PROTECTION
3. CONSTRUCTION ENTRANCE

[XX] DEMOLITION NOTES:

1. SAWCUT
2. EXISTING BUILDING AND FOUNDATION TO BE DEMOLISHED
3. REMOVE STORM STRUCTURE AND BACKFILL TO 95% COMPACTION
4. REMOVE LIGHT STANDARD, J-BOXES, AND BACKFILL TO 95% COMPACTION
5. REMOVE BRICK WALL
6. REMOVE HANDRAIL
7. REMOVE LANDSCAPING (CLEAR AND GRUB)
8. REMOVE SEWER LINE
9. RELOCATE IRRIGATION METER, SEE LANDSCAPE PLANS FOR LOCATION
10. PROTECT EXISTING UTILITY UNLESS NOTED OTHERWISE
11. PROTECT MANHOLE, ADJUST TO GRADE
12. PROTECT TELEPHONE VAULT, ADJUST TO GRADE
13. PROTECT POWER VAULT, ADJUST TO GRADE
14. PROTECT WOOD RETAINING WALL
15. PROTECT CATCH BASIN, ADJUST TO GRADE AS NECESSARY
16. REMOVE IRRIGATION VALVE/METER
17. REMOVE ROCK WALL
18. REMOVE AND REPLACE RESERVED PARKING SIGN
19. PROTECT WATER VAULT
20. PROTECT COMMUNICATIONS TRENCH
21. REMOVE BRICK WALKWAY

CALL BEFORE YOU DIG

THE CONTRACTOR SHALL BE FULLY RESPONSIBLE FOR THE LOCATION AND PROTECTION OF ALL EXISTING UTILITIES. THE CONTRACTOR SHALL VERIFY ALL UTILITY LOCATIONS PRIOR TO CONSTRUCTION BY CALLING THE UNDERGROUND LOCATE LINE AT (800) 424-5555 A MINIMUM OF 48 HOURS PRIOR TO ANY EXCAVATION.

SCJ ALLIANCE
CONSULTING SERVICES
8730 TALLON LANE NE, SUITE 200, LACEY, WA 98516
P: 360.352.1465 F: 360.352.1509
SCJALLIANCE.COM

KMB architects
906 Columbia Street SW, Suite 400
Olympia, Washington 98501
360.352.8883

ROSS D. JARVIS
STATE OF WASHINGTON
43668
REGISTERED PROFESSIONAL ENGINEER

KMB Project # E1626

HEALTH AND WELLNESS CENTER RENOVATION AND ADDITION
SOUTH PUGET SOUND COMMUNITY COLLEGE

2011 MOTTMAN ROAD SW, OLYMPIA, WA 98512
STATE PROJECT NO. 2018-111A

ORIGINAL SHEET SIZE = 24 x 36
HALF SIZE REDUCTIONS = 11 x 17

REVISIONS:

DATE: 05/02/2018

DESIGN DEVELOPMENT

SHEET NO.

EC-01

DEMOLITION AND TESC PLAN

LAST SAVE: mallory.oates, 0850.17 EC-01.dwg - April 17, 2018 (3:22 PM)
PLOT: AutoCAD PDF (General Documentation).pc3, ARCH full bleed D (24.00 x 36.00 Inches), SC-Full.ctb - April 30, 2018 (3:38 PM)

SEC. 28, T18N., R2W., W.M.

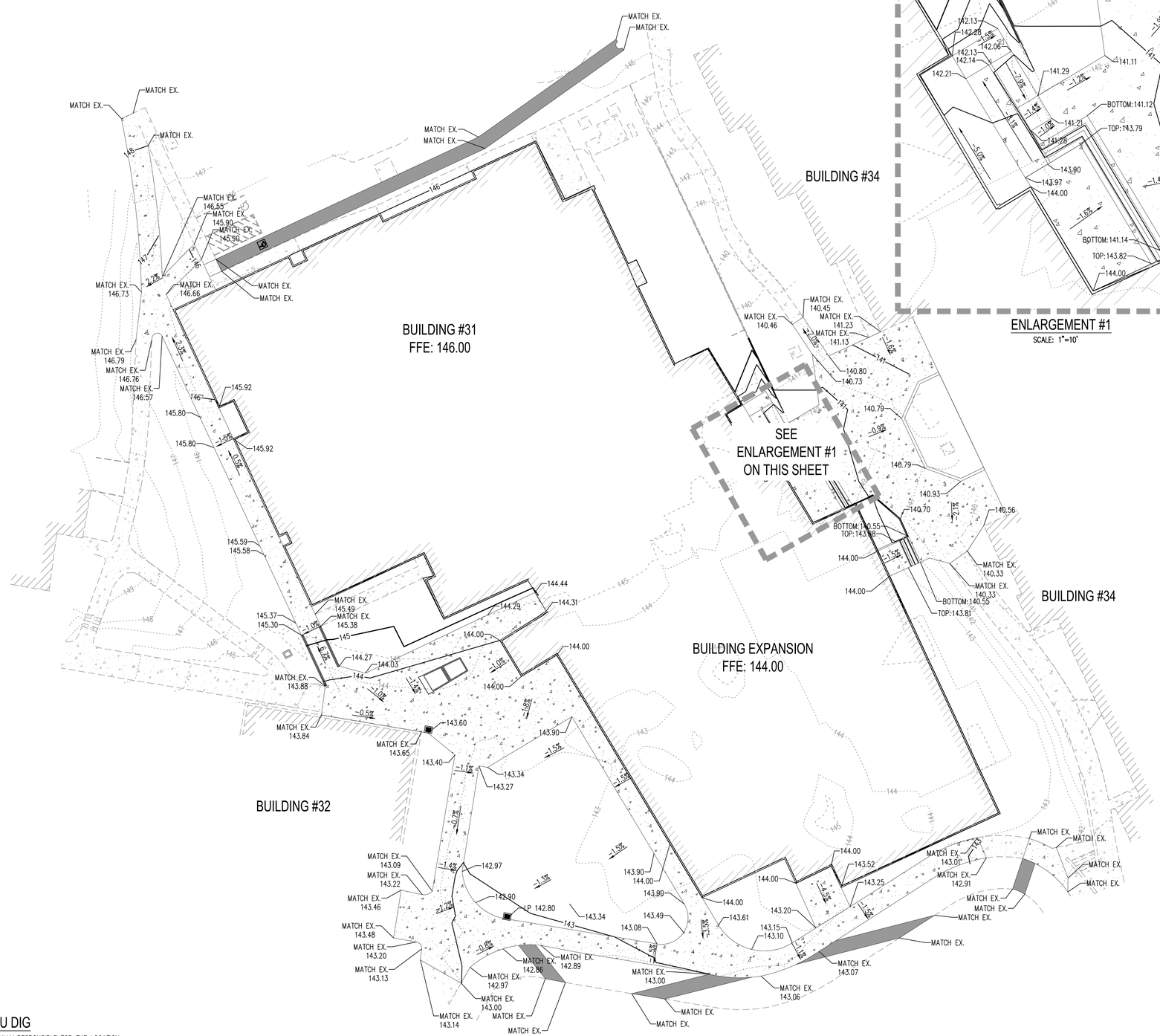

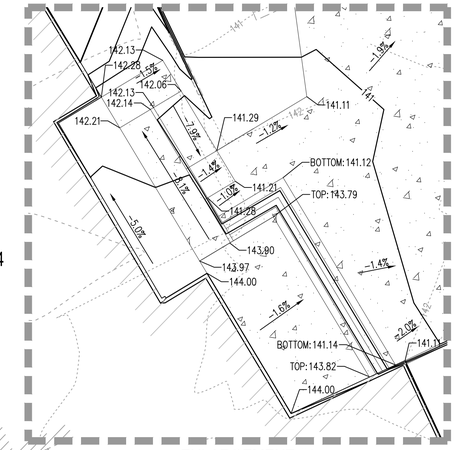

ENLARGEMENT #1

SCALE: 1"=10'

N

0 20 40

SCALE IN FEET

LEGEND

XX	EXISTING MAJOR CONTOUR
XX	EXISTING MINOR CONTOUR
XX	PROPOSED MAJOR CONTOUR
XX	PROPOSED MINOR CONTOUR
	GRADE BREAK
XXX.XX	SPOT ELEVATION
X%	SLOPE LABEL

GRADING QUANTITIES

CUT: 155 C.Y.
FILL: 238 C.Y.
NET: 83 C.Y. (FILL)

CALL BEFORE YOU DIG

THE CONTRACTOR SHALL BE FULLY RESPONSIBLE FOR THE LOCATION AND PROTECTION OF ALL EXISTING UTILITIES. THE CONTRACTOR SHALL VERIFY ALL UTILITY LOCATIONS PRIOR TO CONSTRUCTION BY CALLING THE UNDERGROUND LOCATE LINE AT (800) 424–5555 A MINIMUM OF 48 HOURS PRIOR TO ANY EXCAVATION.

SCJ ALLIANCE
CONSULTING SERVICES
8730 TALLON LANE NE, SUITE 200, LACEY, WA 98516
P: 360.352.1465 F: 360.352.1509
SCJALLIANCE.COM

KMB architects
906 Columbia Street SW, Suite 400
Olympia, Washington 98501
360.352.8883

ROSS D. JARVIS — STATE OF WASHINGTON — 43668 — REGISTERED PROFESSIONAL ENGINEER

KMB Project # E1626

HEALTH AND WELLNESS CENTER RENOVATION AND ADDITION
SOUTH PUGET SOUND COMMUNITY COLLEGE

2011 MOTTMAN ROAD SW, OLYMPIA, WA 98512
STATE PROJECT NO. 2018-111A

ORIGINAL SHEET SIZE = 24 x 36
HALF SIZE REDUCTIONS = 11 x 17

REVISIONS:

DATE: 05/02/2018

DESIGN DEVELOPMENT

SHEET NO.

CG-01

GRADING PLAN

LAST SAVE: mallory.dobbs, 9860.17 CG-01.dwg, April 17, 2018 (3:49 PM)
PLOT: AutoCAD PDF (General Documentation).pc3, ARCH full bleed D (24.00 x 36.00 Inches), SC-Full.ctb - April 30, 2018 (3:38 PM)

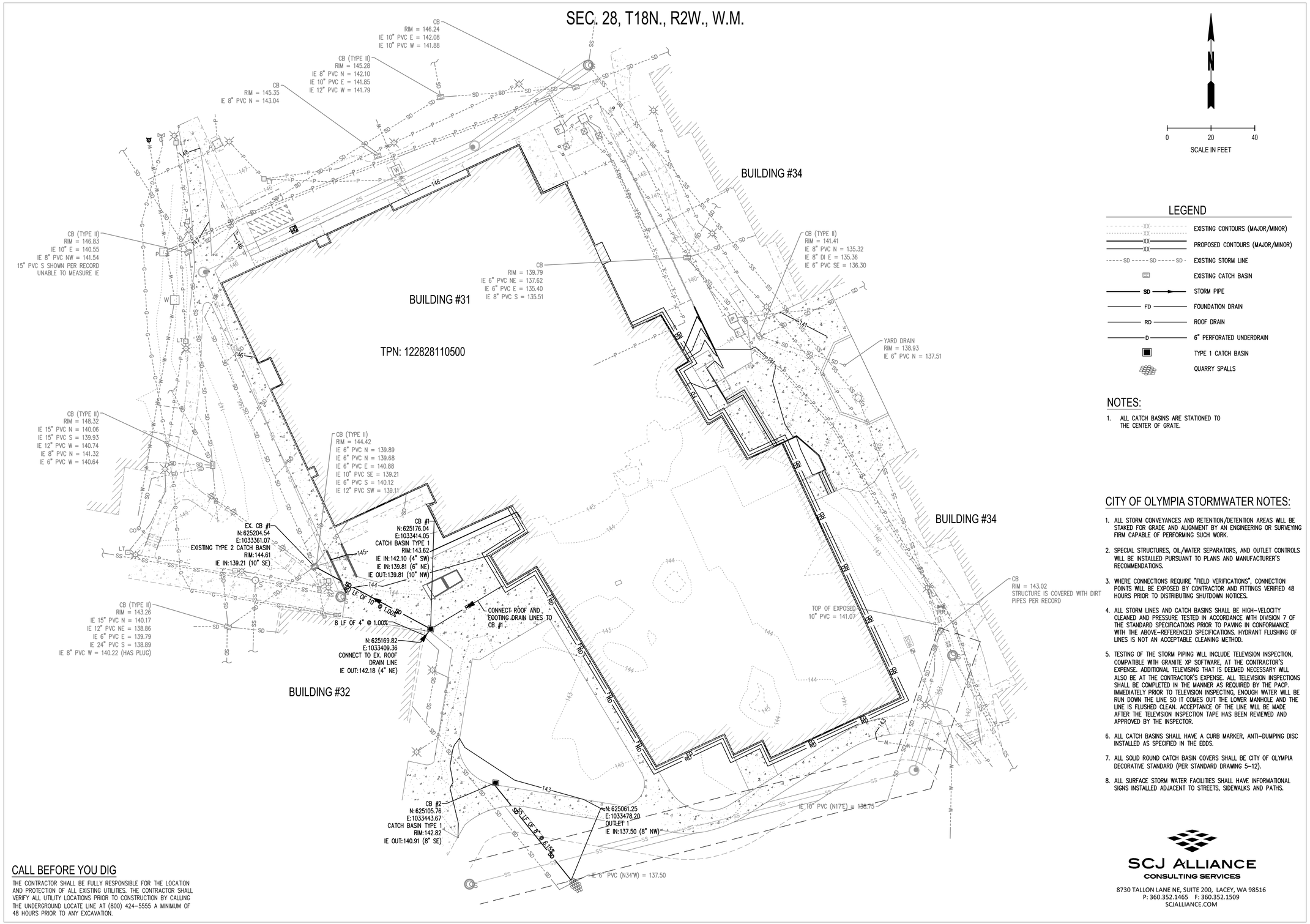

LEGEND

XX	EXISTING CONTOURS (MAJOR/MINOR)
XX	PROPOSED CONTOURS (MAJOR/MINOR)
SD	EXISTING STORM LINE
	EXISTING CATCH BASIN
SD	STORM PIPE
FD	FOUNDATION DRAIN
RD	ROOF DRAIN
D	6" PERFORATED UNDERDRAIN
	TYPE 1 CATCH BASIN
	QUARRY SPALLS

NOTES:

1. ALL CATCH BASINS ARE STATIONED TO THE CENTER OF GRATE.

CITY OF OLYMPIA STORMWATER NOTES:

1. ALL STORM CONVEYANCES AND RETENTION/DETENTION AREAS WILL BE STAKED FOR GRADE AND ALIGNMENT BY AN ENGINEERING OR SURVEYING FIRM CAPABLE OF PERFORMING SUCH WORK.
2. SPECIAL STRUCTURES, OIL/WATER SEPARATORS, AND OUTLET CONTROLS WILL BE INSTALLED PURSUANT TO PLANS AND MANUFACTURER'S RECOMMENDATIONS.
3. WHERE CONNECTIONS REQUIRE "FIELD VERIFICATIONS", CONNECTION POINTS WILL BE EXPOSED BY CONTRACTOR AND FITTINGS VERIFIED 48 HOURS PRIOR TO DISTRIBUTING SHUTDOWN NOTICES.
4. ALL STORM LINES AND CATCH BASINS SHALL BE HIGH-VELOCITY CLEANED AND PRESSURE TESTED IN ACCORDANCE WITH DIVISION 7 OF THE STANDARD SPECIFICATIONS PRIOR TO PAVING IN CONFORMANCE WITH THE ABOVE-REFERENCED SPECIFICATIONS. HYDRANT FLUSHING OF LINES IS NOT AN ACCEPTABLE CLEANING METHOD.
5. TESTING OF THE STORM PIPING WILL INCLUDE TELEVISION INSPECTION, COMPATIBLE WITH GRANITE XP SOFTWARE, AT THE CONTRACTOR'S EXPENSE. ADDITIONAL TELEVISING THAT IS DEEMED NECESSARY WILL ALSO BE AT THE CONTRACTOR'S EXPENSE. ALL TELEVISION INSPECTIONS SHALL BE COMPLETED IN THE MANNER AS REQUIRED BY THE PACP. IMMEDIATELY PRIOR TO TELEVISION INSPECTING, ENOUGH WATER WILL BE RUN DOWN THE LINE SO IT COMES OUT THE LOWER MANHOLE AND THE LINE IS FLUSHED CLEAN. ACCEPTANCE OF THE LINE WILL BE MADE AFTER THE TELEVISION INSPECTION TAPE HAS BEEN REVIEWED AND APPROVED BY THE INSPECTOR.
6. ALL CATCH BASINS SHALL HAVE A CURB MARKER, ANTI-DUMPING DISC INSTALLED AS SPECIFIED IN THE EDDS.
7. ALL SOLID ROUND CATCH BASIN COVERS SHALL BE CITY OF OLYMPIA DECORATIVE STANDARD (PER STANDARD DRAWING 5-12).
8. ALL SURFACE STORM WATER FACILITIES SHALL HAVE INFORMATIONAL SIGNS INSTALLED ADJACENT TO STREETS, SIDEWALKS AND PATHS.

CALL BEFORE YOU DIG

THE CONTRACTOR SHALL BE FULLY RESPONSIBLE FOR THE LOCATION AND PROTECTION OF ALL EXISTING UTILITIES. THE CONTRACTOR SHALL VERIFY ALL UTILITY LOCATIONS PRIOR TO CONSTRUCTION BY CALLING THE UNDERGROUND LOCATE LINE AT (800) 424-5555 A MINIMUM OF 48 HOURS PRIOR TO ANY EXCAVATION.

SCJ ALLIANCE
CONSULTING SERVICES
8730 TALLON LANE NE, SUITE 200, LACEY, WA 98516
P: 360.352.1465 F: 360.352.1509
SCJALLIANCE.COM

KMB architects
906 Columbia Street SW, Suite 400
Olympia, Washington 98501
360.352.8883

ROSS D. JARVIS
STATE OF WASHINGTON
43668
REGISTERED
PROFESSIONAL ENGINEER

KMB Project # E1626

HEALTH AND WELLNESS CENTER RENOVATION AND ADDITION
SOUTH PUGET SOUND COMMUNITY COLLEGE

2011 MOTTMAN ROAD SW, OLYMPIA, WA 98512
STATE PROJECT NO. 2018-111A

ORIGINAL SHEET SIZE = 24 x 36
HALF SIZE REDUCTIONS = 11 x 17

REVISIONS:

DATE: 05/02/2018

DESIGN DEVELOPMENT

SHEET NO.

SD-01

DRAINAGE PLAN

LAST SAVE: mallory.dobbs, 9860.17 SD-01.dwg - April 30, 2018 (3:31 PM)
PLOT: AutoCAD PDF (General Documentation).pc3, ARCH full bleed D (24.00 x 36.00 Inches), SC-Full.ctb - April 30, 2018 (3:38 PM)

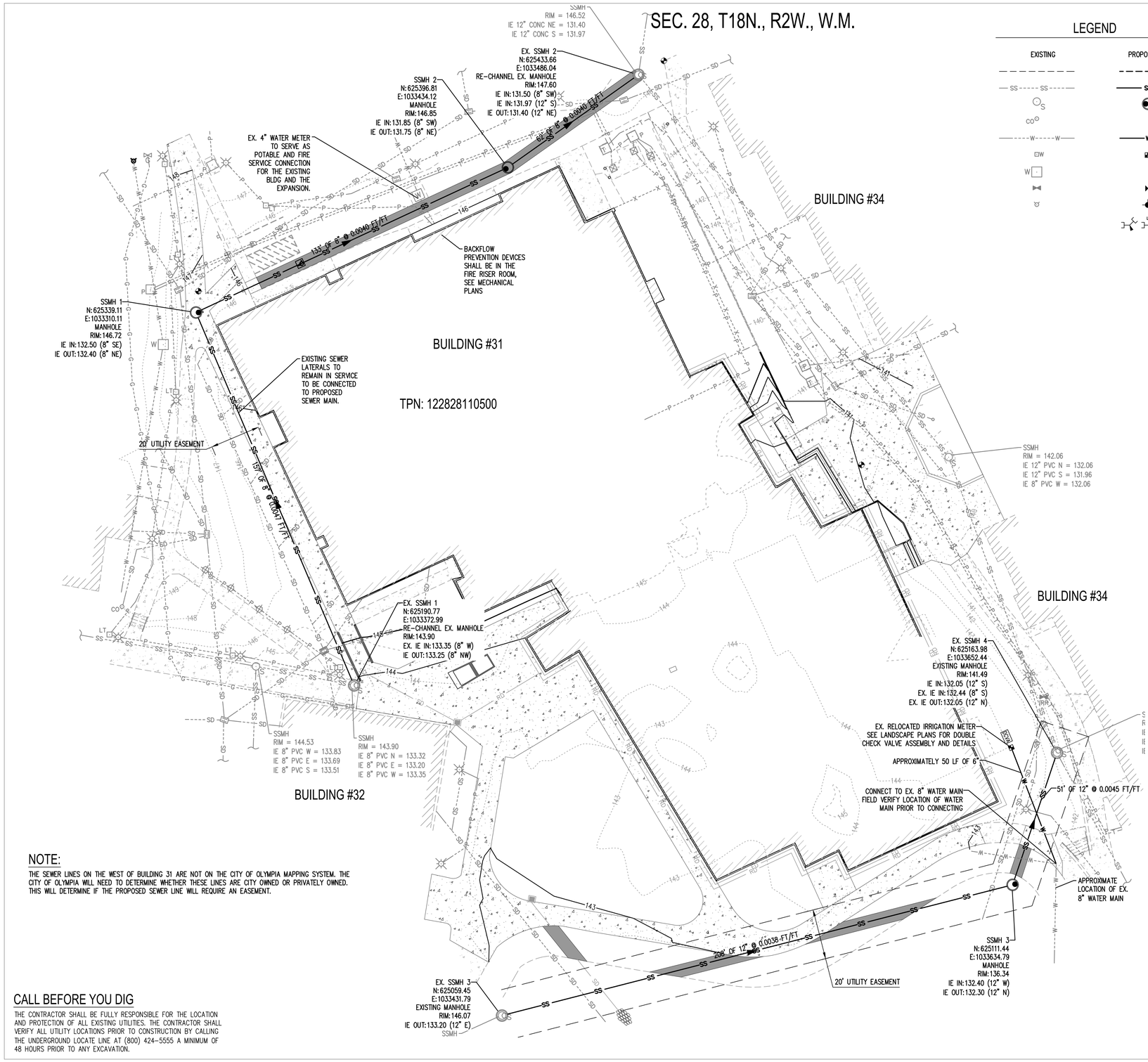

LEGEND

EXISTING	PROPOSED
	EASEMENT
SS	SANITARY SEWER LINE
S	SEWER MANHOLE
CO	SEWER CLEANOUT
W	WATER LINE
W	WATER METER
W	WATER VAULT
	WATER VALVE
	HYDRANT
	BEND W/THRUSTBLOCKING

N

0 20 40

SCALE IN FEET

CITY OF OLYMPIA WATER NOTES:

1. ALL LINES WILL BE CHLORINATED AND TESTED IN CONFORMANCE AMERICAN WATER WORKS ASSOCIATION STANDARDS.
2. ALL WATER MAINS WILL BE STAKED FOR GRADES AND ALIGNMENT BY AN ENGINEERING OR SURVEYING FIRM CAPABLE OF PERFORMING SUCH WORK. STAKING WILL BE MAINTAINED THROUGHOUT CONSTRUCTION.
3. ALL WATER SYSTEM CONNECTIONS TO SERVE BUILDINGS OR PROPERTIES WITH DOMESTIC POTABLE WATER, FIRE SPRINKLER SYSTEMS, OR IRRIGATION SYSTEMS WILL COMPLY WITH THE MINIMUM BACKFLOW PREVENTION REQUIREMENTS AS ESTABLISHED BY THE WASHINGTON STATE DEPARTMENT OF HEALTH AND THE CITY OF OLYMPIA IN ITS CROSS CONNECTION PROGRAM.
4. THE CITY REQUIRES 10 WORKING DAYS WRITTEN NOTICE TO SCHEDULE SHUTDOWNS. THE WRITTEN NOTICE WILL BE COORDINATED WITH THE CITY INSPECTOR. THE CITY OF OLYMPIA DRINKING WATER OPERATIONS OR CITY INSPECTOR WILL PERFORM THE SHUTDOWN.
5. AT ANY CONNECTION TO AN EXISTING LINE WHERE A NEW VALVE IS NOT INSTALLED, THE EXISTING VALVE MUST BE PRESSURE TESTED TO CITY STANDARDS BY THE CONTRACTOR PRIOR TO CONNECTION. IF AN EXISTING VALVE FAILS TO PASS THE TEST, THE CONTRACTOR WILL MAKE THE NECESSARY PROVISIONS TO TEST THE NEW LINE PRIOR TO CONNECTION TO THE EXISTING SYSTEM OF INSTALL A NEW VALVE.
6. AT ANY WATER MAIN TAP TO EXISTING CITY MAINS WHERE THE CONTRACTOR ENCOUNTERS A COUPLING OR EXISTING ASSEMBLIES, THE CONTRACTOR WILL PROVIDE A MINIMUM OF 18 INCHES OF CLEARANCE FROM COUPLING OR ASSEMBLIES TO EDGE OF TAPPING SLEEVE.
7. ANY WATER MAIN TAP OR CONNECTION WILL BE BLOCKED ACCORDING TO THE CITY OF OLYMPIA STANDARD DRAWINGS.
8. ANY EXCAVATION THAT EXPOSES AN ASBESTOS CEMENT (AC) WATER MAIN OR THE CITY'S 36-INCH WATER TRANSMISSION MAIN SHALL BE BEDDED WITH CONTROLLED DENSITY FILL (CDF) PURSUANT TO THE WSDOT SPECIFICATIONS FOR CDF. AS AN OPTION THE CONTRACTOR MAY CHOOSE TO REPLACE THE AC PIPE AT ANY CROSSING WITH DUCTILE IRON PIPE BENCHED INTO BOTH TRENCH WALLS. THE CONTRACTOR WILL COORDINATE WITH THE CITY INSPECTOR TO HAVE A CITY OF OLYMPIA DRINKING WATER OPERATIONS STAFF MEMBER ON SITE BEFORE CONSTRUCTION BEGINS.
9. BEFORE CUTTING OR REMOVING ANY EXISTING AC PIPE, THE CONTRACTOR WILL SUPPLY THE CITY OF OLYMPIA INSPECTOR A COPY OF THE WORKMAN'S CERTIFICATIONS TO WORK WITH AC PIPE. THE CONTRACTOR WILL CONFORM TO ALL REGULATIONS AND GUIDANCE RELATED TO ASBESTOS WORK PROVIDED BY THE OLYMPIC REGION CLEAN AIR AGENCY.

CITY OF OLYMPIA SANITARY SEWER NOTES:

1. IF CONSTRUCTION IS TO TAKE PLACE IN THE COUNTY RIGHT-OF-WAY, THE CONTRACTOR SHALL NOTIFY THE COUNTY AND OBTAIN ALL THE REQUIRED APPROVALS AND PERMITS.
2. THE CITY OF OLYMPIA CONSTRUCTION INSPECTOR SHALL BE NOTIFIED A MINIMUM OF 48 HOURS (TWO WORKING DAYS) IN ADVANCE OF A TAP CONNECTION TO AN EXISTING MAIN. THE INSPECTOR SHALL BE PRESENT AT THE TIME OF THE TAP.
3. ALL SEWER MAINS SHALL BE FIELD STAKED FOR GRADES AND ALIGNMENT BY A LICENSED ENGINEERING OR SURVEYING FIRM QUALIFIED TO PERFORM SUCH WORK. STAKING SHALL BE MAINTAINED THROUGHOUT CONSTRUCTION.
4. WHEN TEMPORARY STREET PATCHES ARE ALLOWED BY THE CITY, COLD MIX ASPHALT SHALL BE PLACED AND COMPACTED TO A MAXIMUM DEPTH OF 2 INCHES. CONTRACTOR SHALL BE RESPONSIBLE FOR MAINTENANCE AS REQUIRED BY THE CITY.
5. AFTER BACKFILLING, BUT PRIOR TO PAVING, ALL MAINS AND APPURTENANCES SHALL BE INSPECTED AND APPROVED BY THE CITY OF OLYMPIA CONSTRUCTION INSPECTOR. APPROVAL DOES NOT CONSTITUTE FINAL ACCEPTANCE OF THE SEWER LINE. THE CONTRACTOR SHALL RETAIN THE RESPONSIBILITY TO REPAIR ALL DEFICIENCIES AND FAILURES REVEALED DURING ALL REQUIRED TESTING FOR ACCEPTANCE AND THROUGH THE DURATION OF THE WARRANTY. IT SHALL BE THE CONTRACTOR'S RESPONSIBILITY TO NOTIFY THE CITY OF OLYMPIA FOR THE REQUIRED INSPECTIONS. ANY MAIN OR APPURTENANCE BACKFILLED PRIOR TO INSPECTION SHALL BE RE-EXCAVATED FOR INSPECTION.
6. ALL LINES WILL BE HIGH-VELOCITY CLEANED AND SUBJECTED TO A LOW-PRESSURE AIR TEST PURSUANT TO CURRENT WSDOT/APWA SPECIFICATIONS AFTER BACKFILLING, BUT PRIOR TO PAVING (SEE GENERAL NOTE 1). HYDRANT FLUSHING OF LINES IS NOT AN ACCEPTABLE CLEANING METHOD.
7. TESTING OF THE SANITARY SEWER MAIN WILL INCLUDE TELEVISION INSPECTION AT THE CONTRACTOR'S EXPENSE. ADDITIONAL TEVLEVISING THAT IS DEEMED NECESSARY WILL ALSO BE AT THE CONTRACTOR'S EXPENSE. ALL TELEVISION INSPECTIONS SHALL BE COMPLETED IN THE MANNER REQUIRED BY THE PACP. IMMEDIATELY PRIOR TO TELEVISION INSPECTION, ENOUGH WATER WILL BE RUN DOWN THE LINE SO IT COMES OUT THE LOWER MANHOLE AND THE LINE IS FLUSHED CLEAN. ACCEPTANCE OF THE LINE WILL BE MADE AFTER THE TELEVISION INSPECTION TAPE HAS BEEN REVIEWED AND APPROVED BY THE INSPECTOR.
8. A TEST OF ALL MANHOLES IN ACCORDANCE WITH OLYMPIA STANDARD IS ALSO REQUIRED. TESTING WILL TAKE PLACE AFTER ALL UNDERGROUND UTILITIES ARE INSTALLED AND COMPACTION OF THE ROADWAY SUBGRADE IS COMPLETED.

NOTE:

THE SEWER LINES ON THE WEST OF BUILDING 31 ARE NOT ON THE CITY OF OLYMPIA MAPPING SYSTEM. THE CITY OF OLYMPIA WILL NEED TO DETERMINE WHETHER THESE LINES ARE CITY OWNED OR PRIVATELY OWNED. THIS WILL DETERMINE IF THE PROPOSED SEWER LINE WILL REQUIRE AN EASEMENT.

CALL BEFORE YOU DIG

THE CONTRACTOR SHALL BE FULLY RESPONSIBLE FOR THE LOCATION AND PROTECTION OF ALL EXISTING UTILITIES. THE CONTRACTOR SHALL VERIFY ALL UTILITY LOCATIONS PRIOR TO CONSTRUCTION BY CALLING THE UNDERGROUND LOCATE LINE AT (800) 424-5555 A MINIMUM OF 48 HOURS PRIOR TO ANY EXCAVATION.

SCJ ALLIANCE
CONSULTING SERVICES
8730 TALLON LANE NE, SUITE 200, LACEY, WA 98516
P: 360.352.1465 F: 360.352.1509
SCJALLIANCE.COM

KMB architects
906 Columbia Street SW, Suite 400
Olympia, Washington 98501
360.352.8883

ROSS D. JARVIS
STATE OF WASHINGTON
43668
REGISTERED
PROFESSIONAL ENGINEER

KMB Project # E1626

HEALTH AND WELLNESS CENTER RENOVATION AND ADDITION
SOUTH PUGET SOUND COMMUNITY COLLEGE

2011 MOTTMAN ROAD SW, OLYMPIA, WA 98512
STATE PROJECT NO. 2018-111A

ORIGINAL SHEET SIZE = 24 x 36
HALF SIZE REDUCTIONS = 11 x 17

REVISIONS:

DATE: 05/02/2018

DESIGN DEVELOPMENT

SHEET NO.

UT-01

WATER AND SEWER PLAN

LAST SAVE: mallory.dobbs, 0860.17 UT-01.dwg - April 25, 2018 (8:13 AM)
PLOT: AutoCAD PDF (General Documentation).pc3, ARCH full bleed D (24.00 x 36.00 Inches), SC-Full.ctb - April 30, 2018 (3:39 PM)